DMT 110A MARINE TRANSMISSION SPECIFICATION			
GEAR RATIO	1.77 2.09 2.42 2.82 3.19 3.81		
TOTAL WEIGHT	APPROX. 212 kg(DRY)		
OIL CAPACITY	APPROX. 4 L		
OIL VISCOSITY	SAE # 30		
OIL PRESSURE	1.96 ~ 2.54 MPa	CLUTCH OIL	
DIRECTION OF ROTATION IN FORWARD	INPUT	C.C.W VIEWED FROM THE STERN	
	OUTPUT	C.W VIEWED FROM THE STERN	
OIL CHANGE INTERVAL	THE FIRST 100HOURS OF INITIAL OPERATION		
	AND EVERY 1000HOURS THEREAFTER		
SHIFTING LIMIT	UNDER 50% OF THE RATED ENGINE SPEED		
OIL COOLER	WATER FLOW 40 ~ 60L/min		
	TEMPERATURE OF COOLING WATER	MAX 32°C	
OPERATING TORQUE OF SHIFTING LEVER	UNDER 2.94Nm		

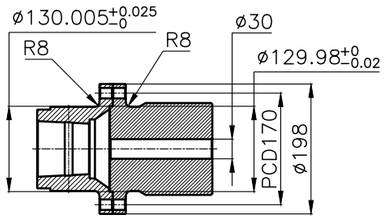

OUTPUT SHAFT COUPLING & PROPELLER COUPLING DIMENSION

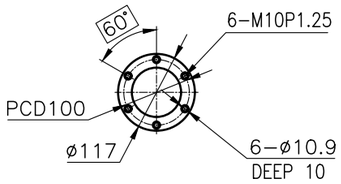

INPUT COUPLING DIMENSION

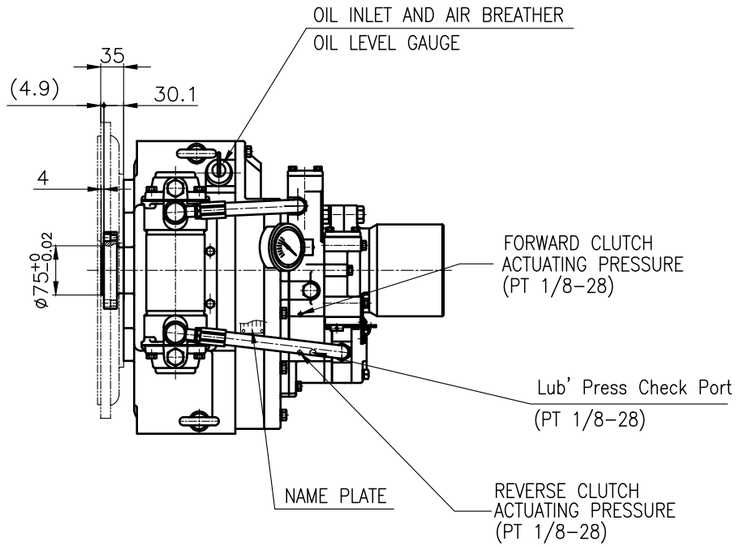

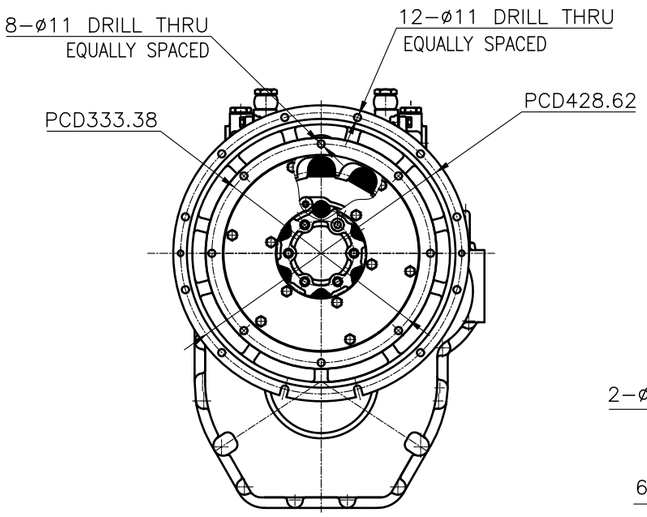

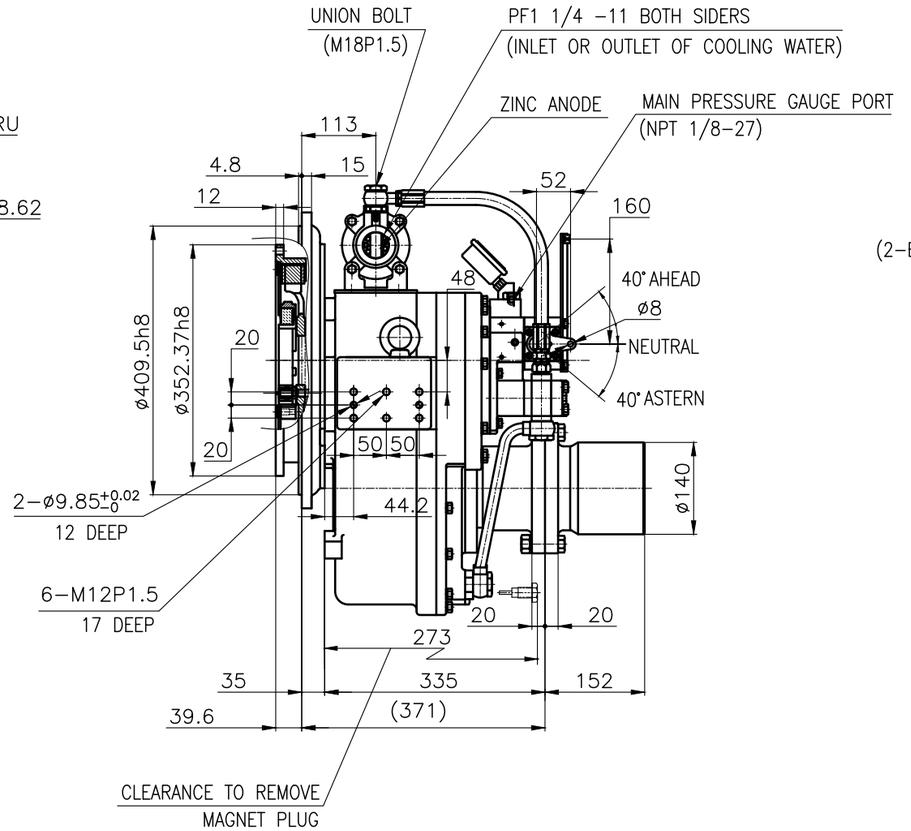

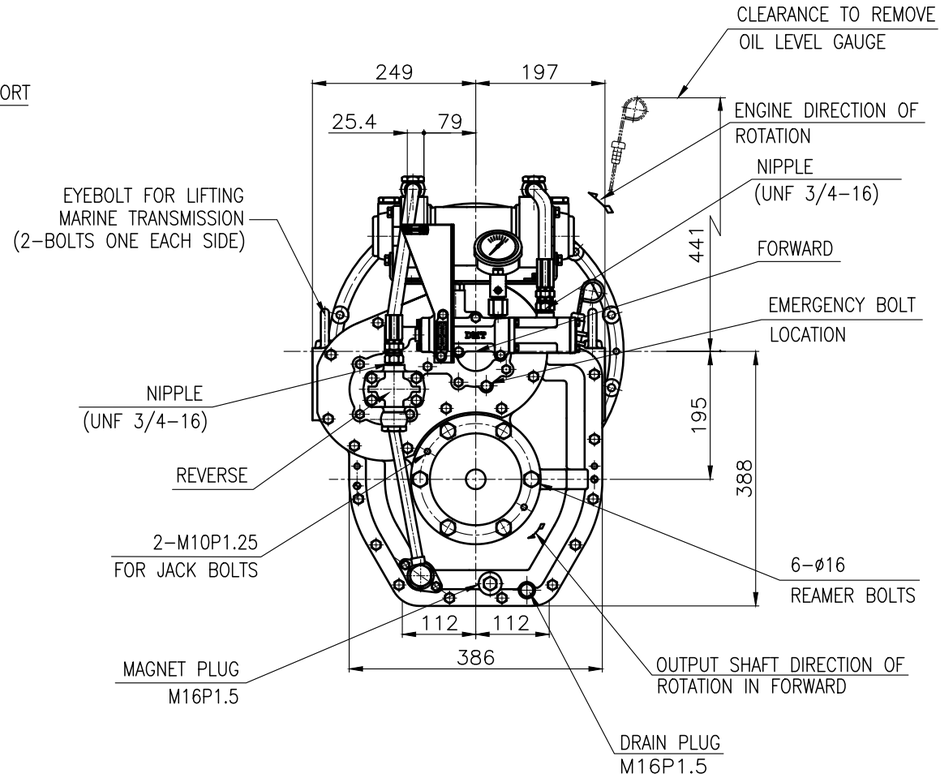

REMARK (HOT)
1.HOUSING: SAE#3
2.DRIVING RING: SAE 11.5"
3.COUPLING TYPE : DUAL STAGE
4.APPLICATION ENGINE : STANDARD

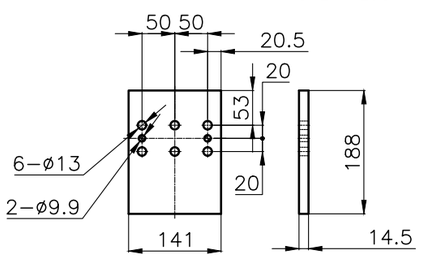

BRACKET DIMENSION

공동공차 TOLERANCE ON				절삭가공		
분수 FRACTIONS	소수 DECIMALS	각도 ANGLES		일반공차		
± ——	± ——	± ——		구분	조급	중급	정급
				1 초과 4 이하	± 0.3	± 0.1	± 0.05
				4 16	± 0.5	± 0.2	± 0.07
				16 63	± 0.7	± 0.3	± 0.1
				63 250	± 1.2	± 0.5	± 0.2
				250 1000	± 2.0	± 0.8	± 0.3

번호 NO.	품번 PART NO.	품명 PART NAME	개수 Q'TY	재질 MATERIAL	규격 SIZE	비고 REMARKS

재질 MATERIAL	——		
	작성 DATE 2018.06.20	척도 SCALE	N/S
승인 APPROVED BY	검도 CHECKED BY	제도 DRAWN	설계 DESIGNED
JK.Kim	TH.Cha	MA.Kim	

형식 TYPE	DMT110A		원도번 ORIGINAL DWG. NO.
품명 NAME	MARINE TRANSMISSION		
도번 DWG. NO.	11000GA~E−3115DCH		개정(REV.) 000
D-I INDUSTRIAL	크기 SIZE	A3	코드번호 CODE ID. NO.

SHEET 1 OF 1

동이기술−004(841×594)

DWG.NO. 11000GA~E−3115DCH 개정(REV.) 000

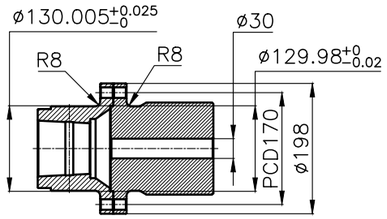

OUTPUT SHAFT COUPLING & PROPELLER COUPLING DIMENSION

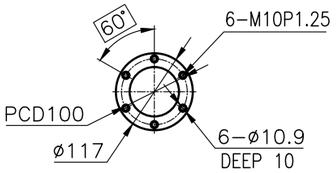

INPUT COUPLING DIMENSION

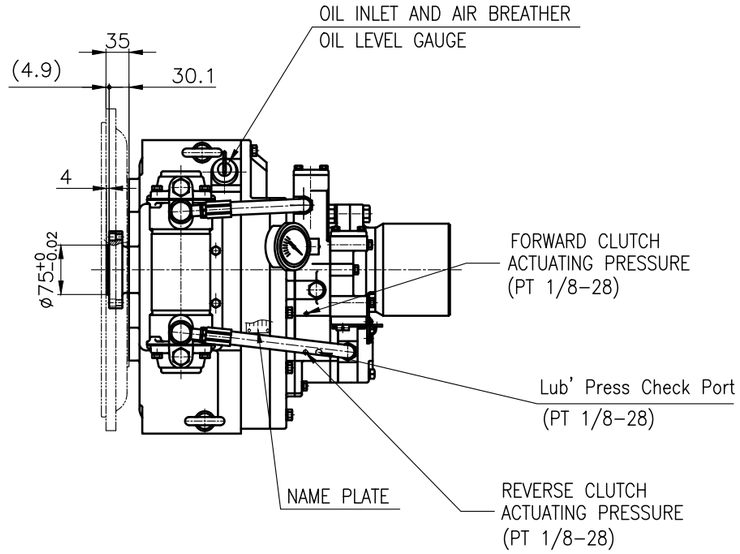

DMT 110A MARINE TRANSMISSION SPECIFICATION			
GEAR RATIO	1.77 2.09 2.42 2.82 3.19 3.81		
TOTAL WEIGHT	APPROX. 212 kg(DRY)		
OIL CAPACITY	APPROX. 4 L		
OIL VISCOSITY	SAE # 30		
OIL PRESSURE	1.96 ~ 2.54 MPa	CLUTCH OIL	
DIRECTION OF ROTATION IN FORWARD	INPUT	C.C.W VIEWED FROM THE STERN	
	OUTPUT	C.W VIEWED FROM THE STERN	
OIL CHANGE INTERVAL	THE FIRST 100HOURS OF INITIAL OPERATION		
	AND EVERY 1000HOURS THEREAFTER		
SHIFTING LIMIT	UNDER 50% OF THE RATED ENGINE SPEED		
OIL COOLER	WATER FLOW 40 ~ 60L/min		
	TEMPERATURE OF COOLING WATER	MAX 32°C	
OPERATING TORQUE OF SHIFTING LEVER	UNDER 2.94Nm		

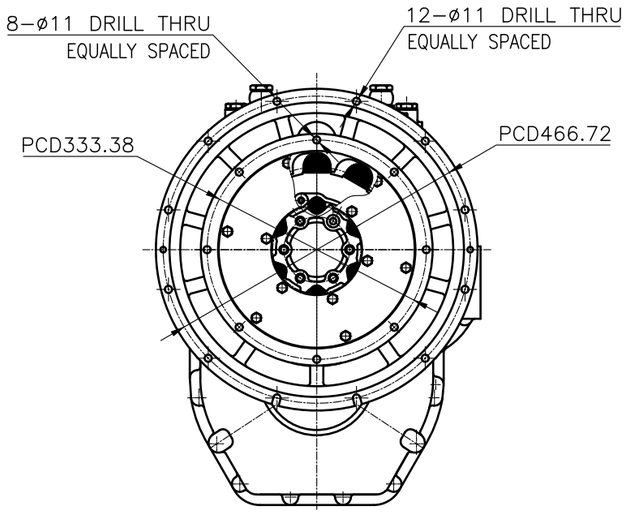

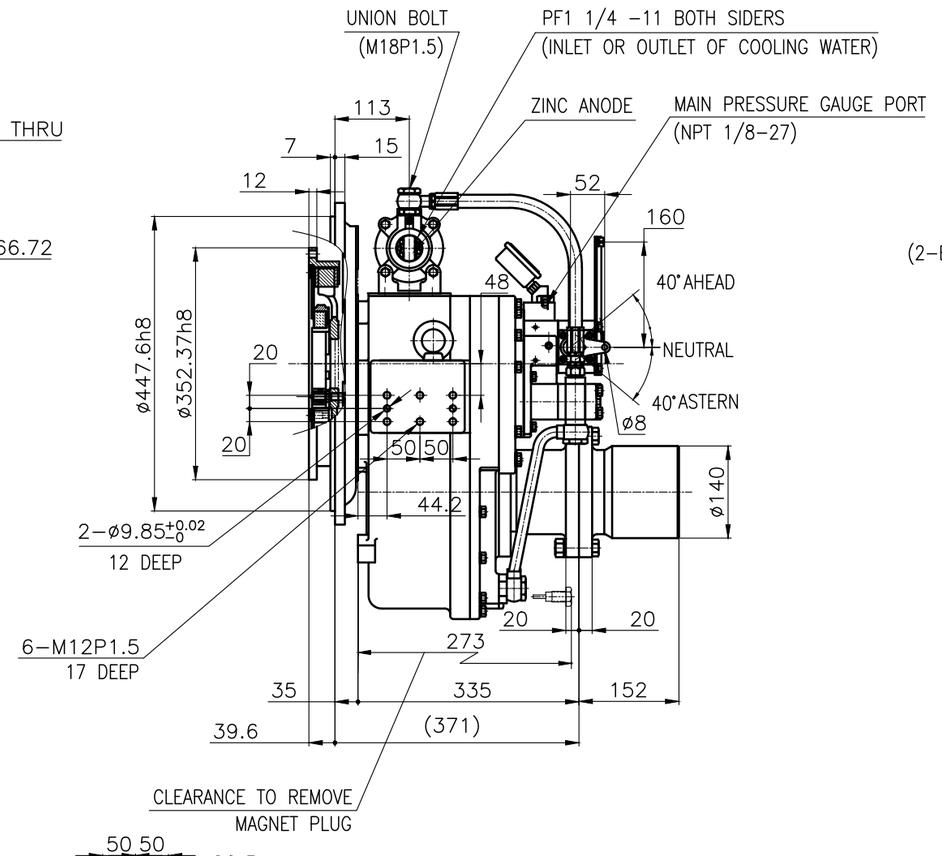

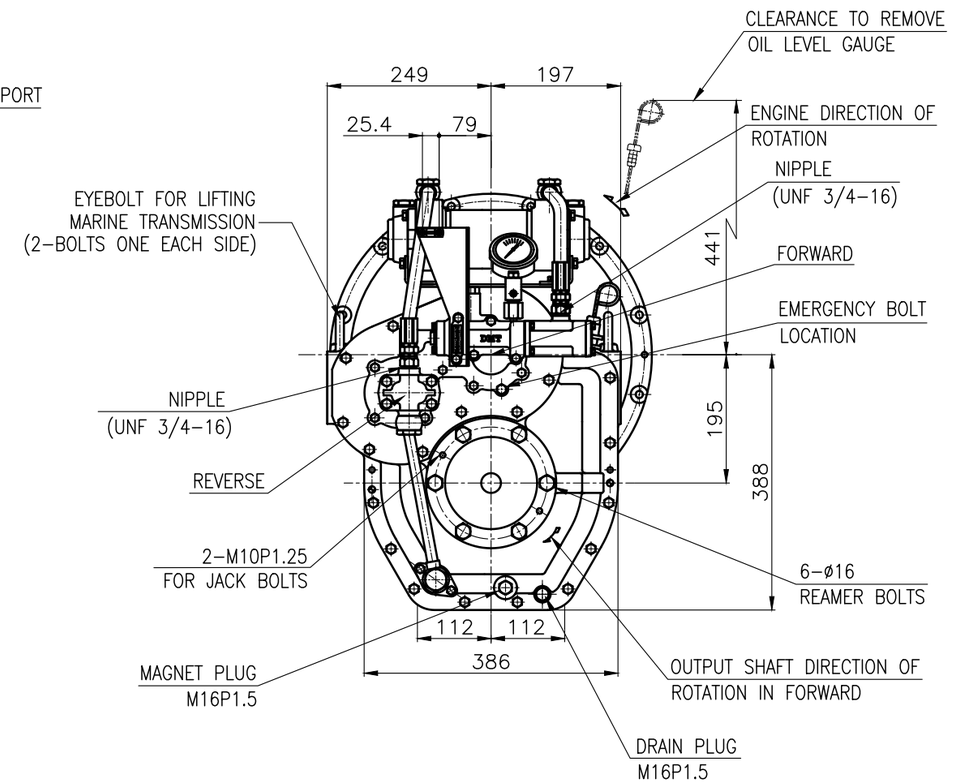

REMARK (HOT)
1.HOUSING: SAE#2
2.DRIVING RING: SAE 11.5"
3.COUPLING TYPE : DUAL STAGE
4.APPLICATION ENGINE : STANDARD

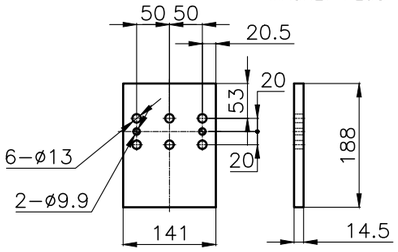

BRACKET DIMENSION

공동공차 TOLERANCE ON			
분수 FRACTIONS	소수 DECIMALS	각도 ANGLES	
± ——	± ——	± ——	
일반공차 절삭가공			
구분	조급	중급	정급
1 초과 4 이하	± 0.3	± 0.1	± 0.05
4 16	± 0.5	± 0.2	± 0.07
16 63	± 0.7	± 0.3	± 0.1
63 250	± 1.2	± 0.5	± 0.2
250 1000	± 2.0	± 0.8	± 0.3

번호 NO.	품번 PART NO.	품명 PART NAME	개수 Q'TY	재질 MATERIAL	규격 SIZE	비고 REMARKS

재질 MATERIAL	——		
작성 DATE 2018.6.20	척도 SCALE N/S		
승인 APPROVED BY	검도 CHECKED BY	제도 DRAWN	설계 DESIGNED
JK.Kim	TH.Cha	MA.Kim	

형식 TYPE	DMT110A	원도번 ORIGINAL DWG. NO.	
품명 NAME	MARINE TRANSMISSION		
도번 DWG. NO.	11000GA~E-2115DCH	개정(REV.)	000
크기 SIZE	A3	코-드 번호 CODE ID. NO.	

D-I INDUSTRIAL

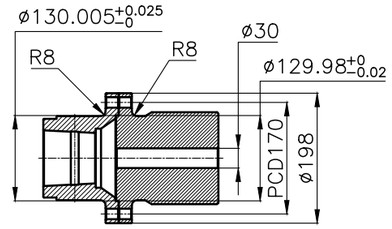

OUTPUT SHAFT COUPLING & PROPELLER COUPLING DIMENSION

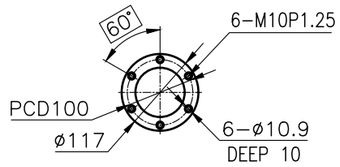

INPUT COUPLING DIMENSION

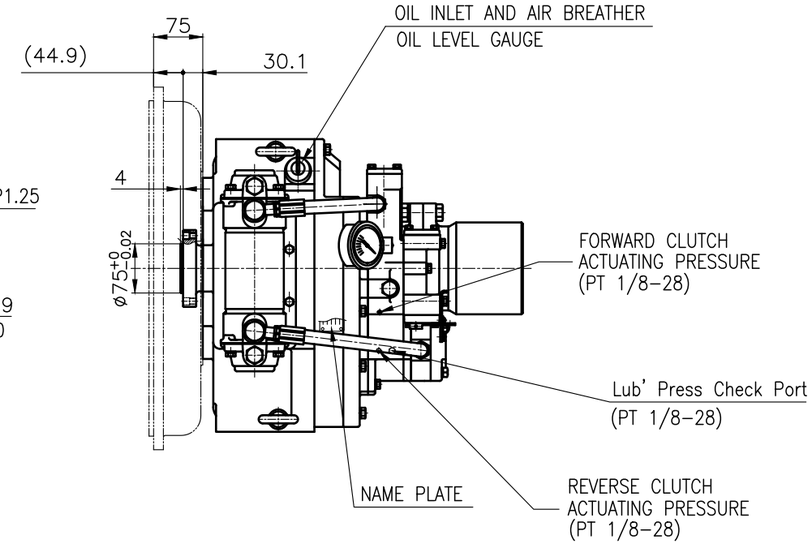

DMT 110A MARINE TRANSMISSION SPECIFICATION			
GEAR RATIO	1.77 2.09 2.42 2.82 3.19 3.81		
TOTAL WEIGHT	APPROX. 212 kg(DRY)		
OIL CAPACITY	APPROX. 4 L		
OIL VISCOSITY	SAE # 30		
OIL PRESSURE	1.96 ~ 2.54 MPa	CLUTCH OIL	
DIRECTION OF ROTATION IN FORWARD	INPUT	C.C.W VIEWED FROM THE STERN	
	OUTPUT	C.W VIEWED FROM THE STERN	
OIL CHANGE INTERVAL	THE FIRST 100HOURS OF INITIAL OPERATION		
	AND EVERY 1000HOURS THEREAFTER		
SHIFTING LIMIT	UNDER 50% OF THE RATED ENGINE SPEED		
OIL COOLER	WATER FLOW 40 ~ 60L/min		
	TEMPERATURE OF COOLING WATER	MAX 32°C	
OPERATING TORQUE OF SHIFTING LEVER	UNDER 2.94Nm		

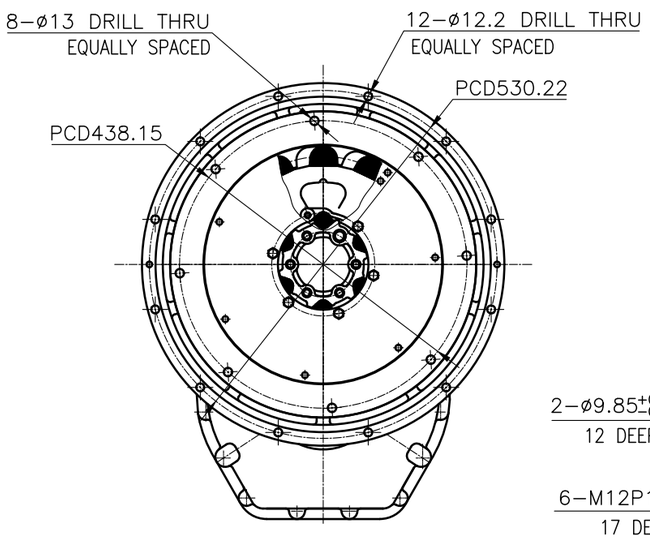

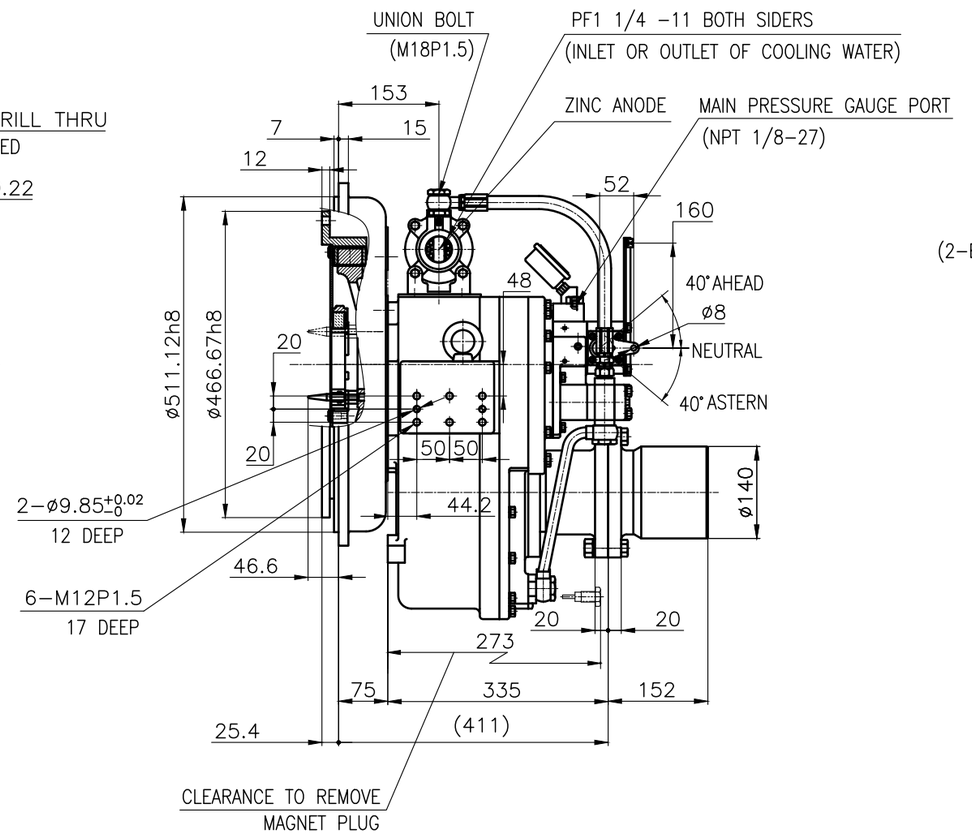

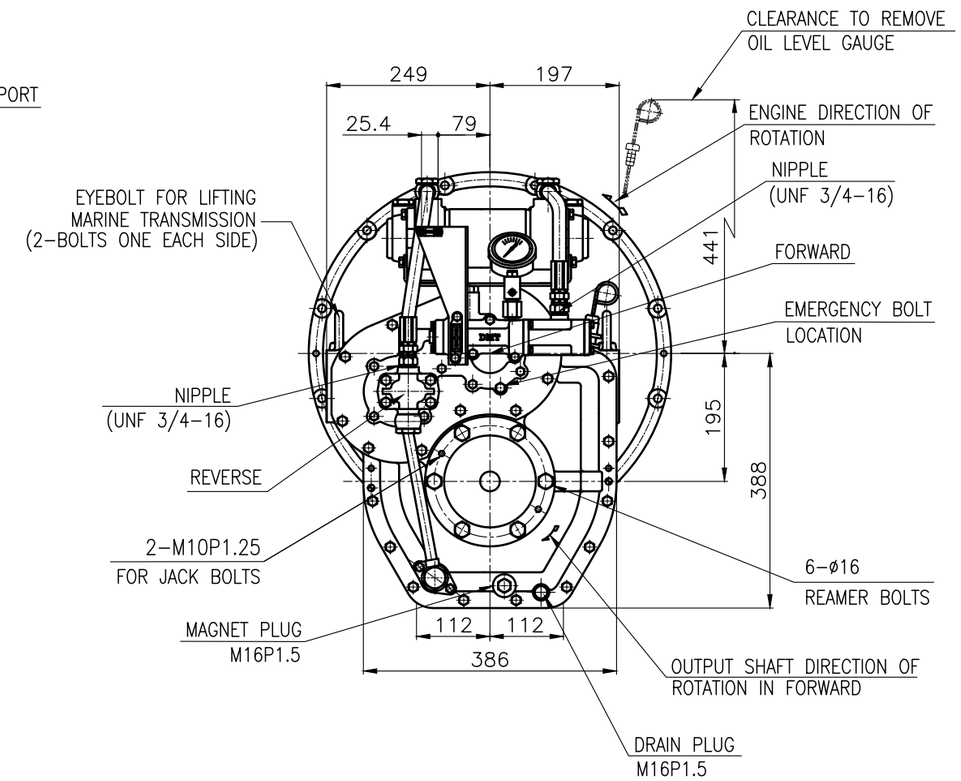

REMARK (HOT)
1.HOUSING: SAE#1
2.DRIVING RING: SAE 14"
3.COUPLING TYPE : DUAL STAGE
4.APPLICATION ENGINE : STANDARD

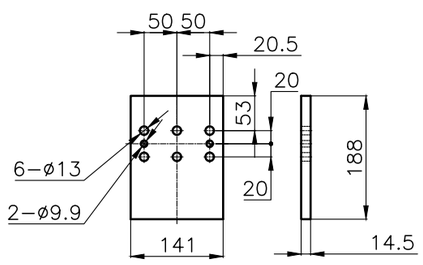

BRACKET DIMENSION

공통공차 TOLERANCE ON			
분수 FRACTIONS ± —	소수 DECIMALS ± —	각도 ANGLES ± —	
일반공차 절삭가공			
구분	조급	중급	정급
1 초과 4 이하	± 0.3	± 0.1	± 0.05
4 16	± 0.5	± 0.2	± 0.07
16 63	± 0.7	± 0.3	± 0.1
63 250	± 1.2	± 0.5	± 0.2
250 1000	± 2.0	± 0.8	± 0.3

번호 NO.	품번 PART NO.	품명 PART NAME	개수 Q'TY	재질 MATERIAL	규격 SIZE	비고 REMARKS

재질 MATERIAL	—		
작성 DATE 2018.06.20	척도 SCALE N/S		
승인 APPROVED BY JK.Kim	검도 CHECKED BY TH.Cha	제도 DRAWN MA.Kim	설계 DESIGNED

D-I INDUSTRIAL

형식 TYPE	DMT110A	원도번 ORIGINAL DWG. NO.	
품명 NAME	MARINE TRANSMISSION		
도번 DWG. NO.	11000GA~E-114DCH	개정(REV.)	000
크기 SIZE	A3	코-드 번호 CODE ID. NO.	