Genset 35 GT/GTC & 40 GTA/GTAC Type Approval Certificate

VERSION 2024-3

PART LIST

PARTS LIST CATALOGUE

NORMS TO PLACE AN ORDER

For fast and more efficient service, please specify the following information on spare parts or ders that must be preferably done by e-mail as specified below:

1- Engine model: As shown in identification plate

2- Engine serial number: As shown in identification plate and stamped on crankcase

3- Item description + part number + quantity required

Spare parts requests must be adressed to :

orders@solediesel.com

Telf.: +34 93 775 44 05

The components shown in the catalog have:

- Figure: Number by which they are represented in scheme
- Description: Trade name of the component
- Quantity: Total number of parts used in the assembly of the part represented (may differ from the total minimum quantities)

Hoses, indicates the total length in meters

The diagrams shown in this catalog of spare parts, have only the purpose to identify the piece in question, its representation is not meaningful and may differ from the actual piece.

In case of doubt, contact Solé Diesel, or your authorized dealer.

The parts i / or references in this catalog are subject to change without notice.

SOLÉ, S.A.

C-243b, km, 2 - P.O. BOX 25

08760 Martorell (Barcelona) Spain

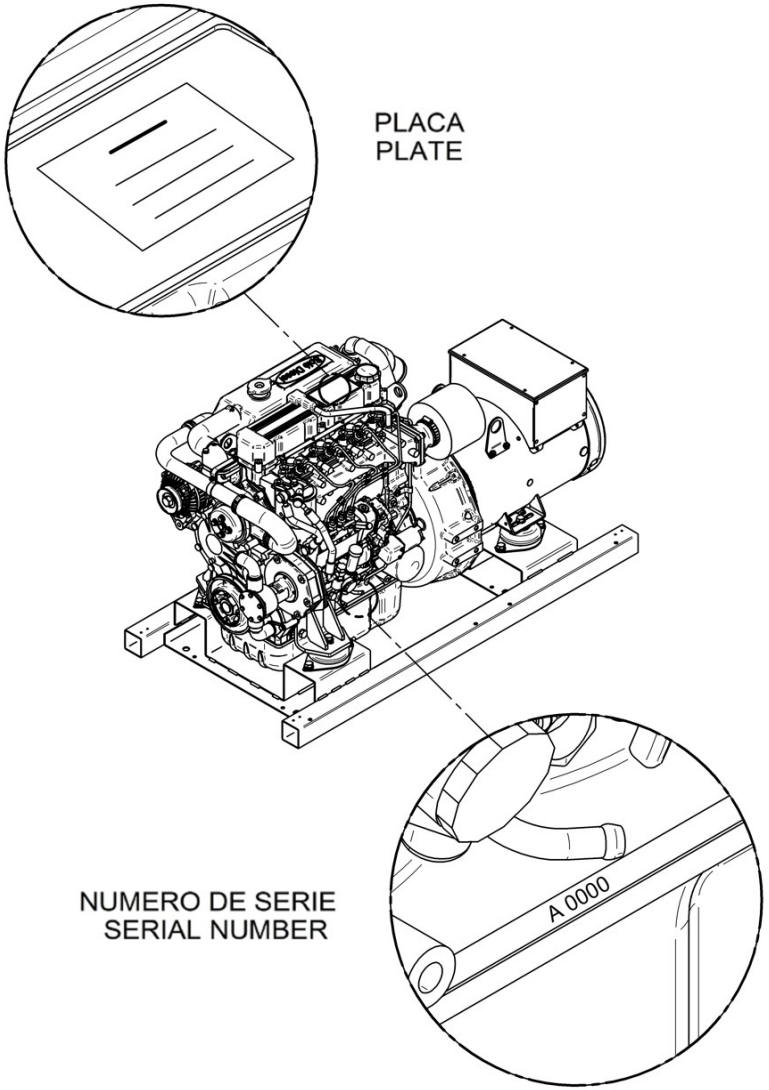

Index

Engine Body
- Cylinder Head
- Rocker Cover & Breather
- Valve Drive
- Timing Parts
- Gear Case
- Cranckcase
- Rear Plate
- Piston & Connectiong Rod
- Crankshaft & Flywheel
- Oil System
- Oil Pan
- Engine Brackets
- Drive Belt Guard For Genset Without Cabin

Inlet & Exhaust
- Inlet

Cooling System
- Water Pump
- Cooler Pipes
- Water Cooler Assy MINI-74 TAC (R)
- Wet Exhaust
- Cross Brace Pump from 74 to 616

Fuel System
- Fuel Pipe And Fuel Leak Alarm
- Injection Nozzle
- Governor Parts
- Kit 2nd Fuel Filter (Without Cabin) TAC
- Kit 2nd Fuel Filter (Cabin)

Electrical System
- Electrical System 12V
- Electrical System 24V
- Parallel Control System 12V
- Parallel Control System 24V
- Control and Power Cabinets
- Genset Extension TAC

Genset Alternator Spare Parts
- Alternator 35 GT/GTC & 40 GTA/GTAC
- Alternator Spare Parts

Genset Alternator Kit
- Alternator Kit Without Cabin
- Alternator Kit With Cabin (400/230V & 480/277V)
- Alternator Kit With Cabin (230V & 240V)
- Genset Chassis

Canopy Spare Parts
- Cabin
- Cabin Kit

Maintenance Kit
- Gasket Kit
- Pipe Rubber Set, Water Line TAC
- Repair Kit Water Pump 1"
- Special Tools
- Special Tools

Engine Body

D_MI74GSTDN_01_1 Cylinder Head

Fig.	Ref.	Qty.	Descr.	Obs	From	UpTo
1	17421001	1	Head Assy,Cylinder			
2A	17220006	8	Cap, Sealing			
2B	13220012	7	Cap Sealing			
2C	17421002	8	Guide,Valve			
2D	17421061	4	Seat,Valve,IN			
2E	17421062	4	Seat,Valve,Exhaust			
2F	(*)	2	Not available			
2G	17421015	4	JET,COMBUSTION			
3	17421012G.1	4	Bolt W/Washer (Generator)			
4	17421046G.3	1	Plug			
5	17421005	17	Bolt,cylinder head			
6	17421004	1	Gasket,Cylinder Head			
7	17420014	1	Eye,Lifting,Front			
8	17421018	1	Eye,Lifting;Head Rea			
9	17421011	1	Gasket			
10	17821012	2	Bolt,W/Washer			

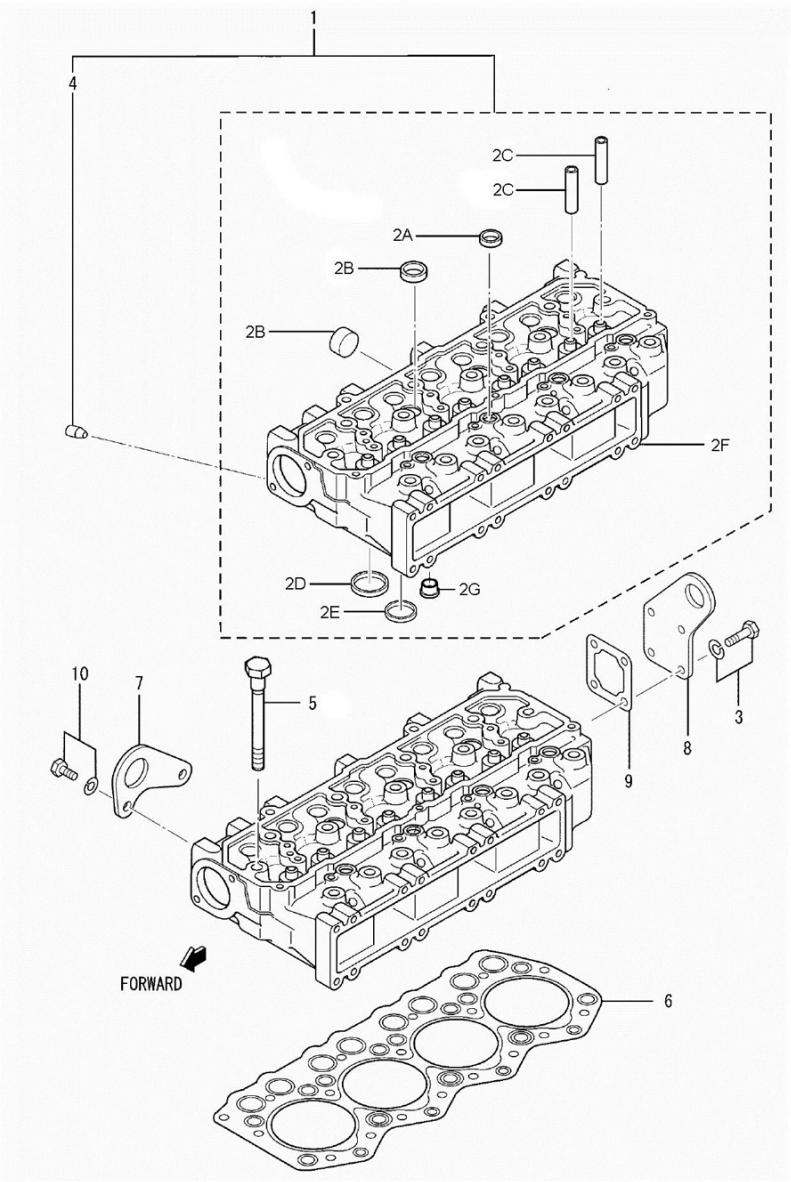

Engine Body

D_MI74GSTDN_01_2 Rocker Cover & Breather

Fig.	Ref.	Qty.	Descr.	Obs	From	UpTo
1	17421009.2	1	Cover Assy,Rocker			
2	17221003G	1	Cap Oil Filler			
3	17421014G.1	5	Bolt W/Washer (Generator)			
4	17421010	1	Rocker Cover Gasket			
5	17421006	1	Hose,BREATHER			

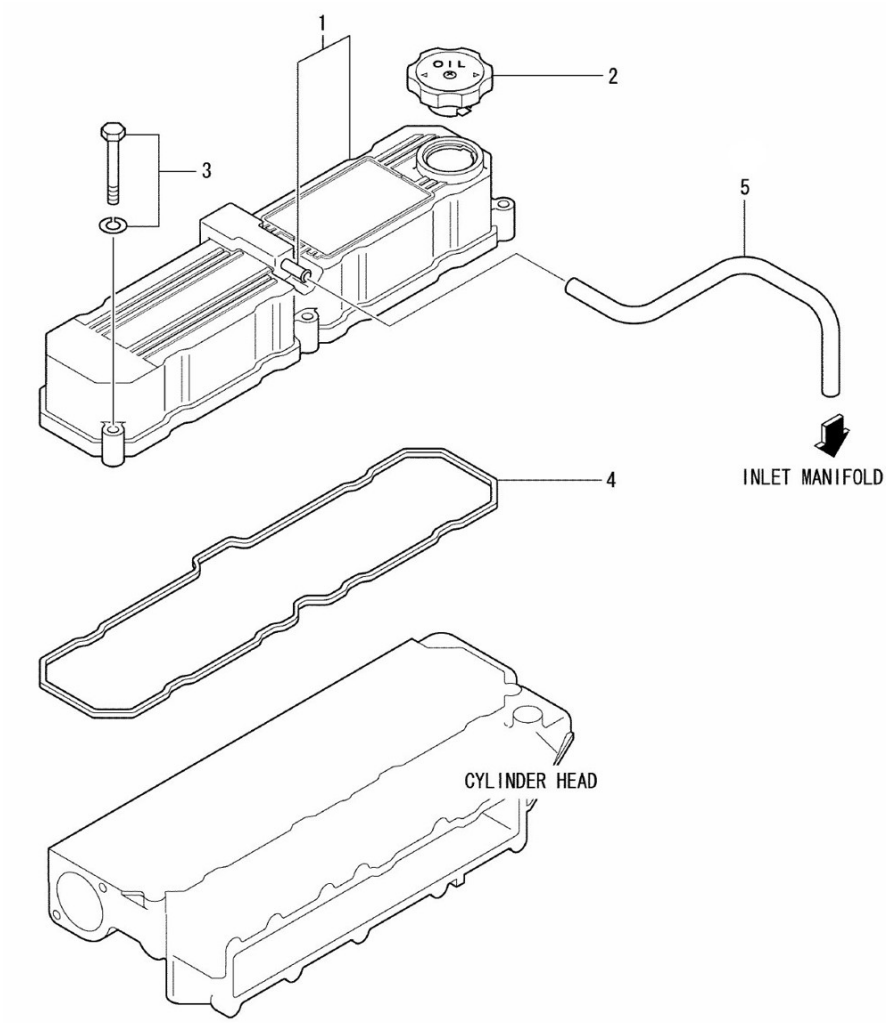

Engine Body

D_GG04_1_3 Valve Drive

Fig.	Ref.	Qty.	Descr.	Obs	From	UpTo
1	17422055.1	4	Valve,Inlet			
2	17422056	4	Exhaust Valve			
3	13322028	8	Spring,valve outler			
4	17422058	8	Retainer,Upper			
5	17122059.1	16	Cotter,Valve			
6	13322024	8	Cap			
7	17422057	8	Seal, Valve Stem			
8A	17222050	2	Ring, SNAP			
8B	17422046	1	Shaft Assy,Rocker			
8BA	13322023	2	Cap, Sealing			
8C	17422048	4	Bracket,Rocker Shaft			
8D	17422053	4	Bolt,Rocker Bracket			
8E	17422142.1	8	Rocker Assy			
8EA	17122060	8	Nut			
8EB	17122044	8	Screw Adjusting			
8F	17422047G.1	3	Spring,Rocker			
8GA	52102258	4	Bolt DIN 933 M8-25 8.8			
8GB	53033008	4	Washer GROWER DIN 127-8			

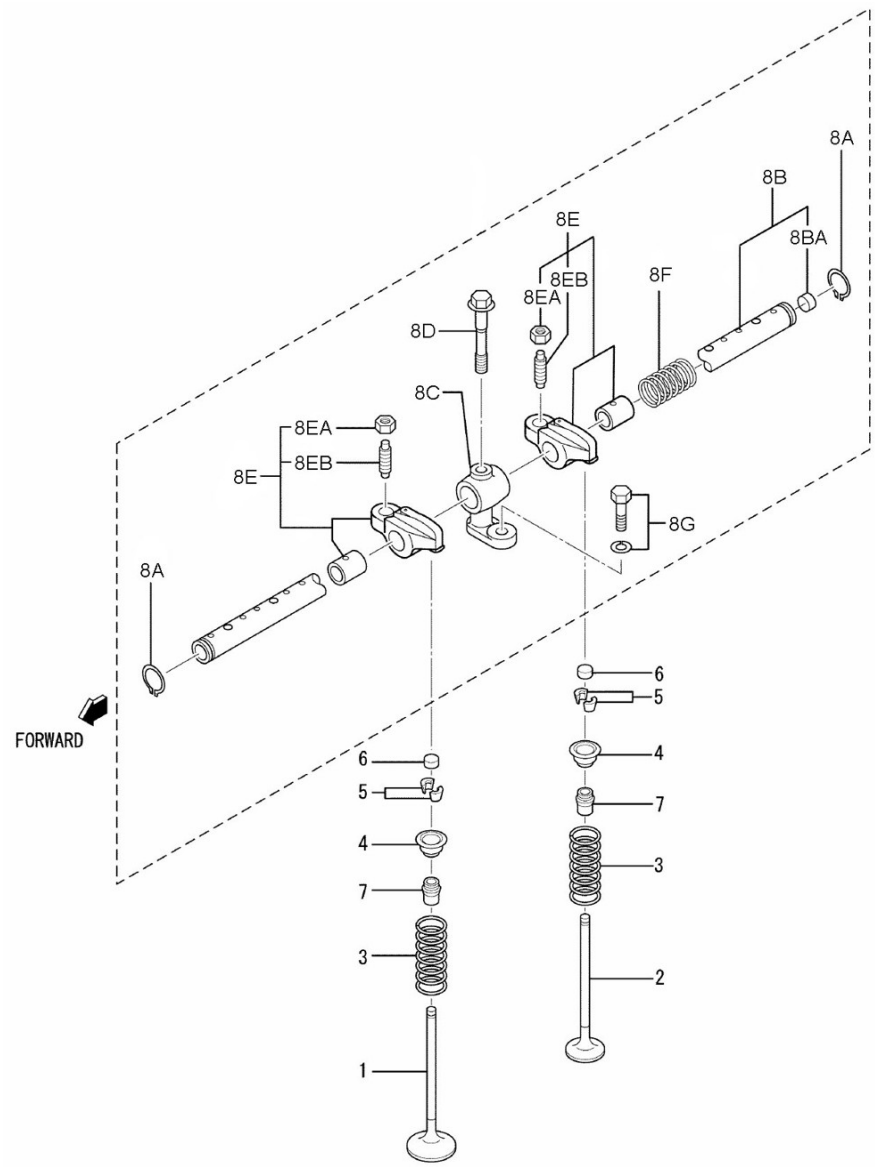

Engine Body

D_GG04_1_4 Timing Parts

Fig.	Ref.	Qty.	Descr.	Obs	From	UpTo
1	17422035	1	CamShaft			
2	13322034	1	Key Woodruff			
3	17422075	1	Plate,THRUST			
4	17422037G.1	2	Bolt W/Washer (Generator)			
5	17122061	8	Tappet			
6	17122041	8	Rod, push			
7	17422037	1	Gear,CamShaft Z=46			
8	17422040	1	Gear,INJ.Pump Z=46			
9	17422038	1	Gear,IDLER Assy Z=49			
10	17122032	1	Plate, thrust			
11	17720010	1	Bolt,W/Washer			
12	17422066	1	Gear,Oil Pump Z=31			
13	53104255	2	Bolt DIN 7984 M8-12 10.9			
14	17422019	1	Gear,CrankShaft			

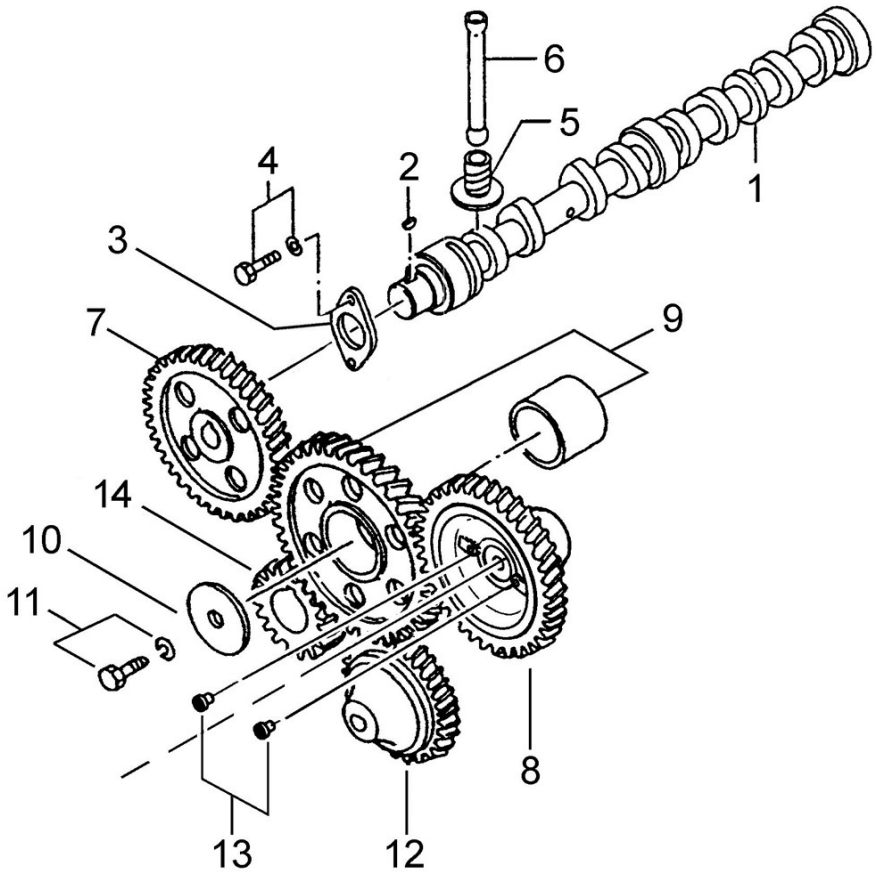

Engine Body

D_MI74GSTDN_01_5 Gear Case

Fig.	Ref.	Qty.	Descr.	Obs	From	UpTo
1	17420024G.1	1	Plate,Front (Generator)			
2	17420035G	1	Case,TIMING Gear			
3	17420018	1	Gasket,Front Plate			
4	17422037G.1	5	Bolt W/Washer (Generator)			
5	17420040	1	Gasket,Gear			
6	17520047	13	Bolt,W/Washer			
7	17420039.1	1	Seal Assy,Oil			
8	17411026	1	Coupling Drive			
9	17422071	1	Nut,INJ.Pump			
10	15310072	1	CrossHead Jaw Coupling			
11	17420047	1	O-Ring D. 140X2			
12	17410010	1	Block Water Pump			
13	13310013	1	Gasket,water pump			
14	51030008	5	Washer DIN 125-8			
15	53038008	5	Washer DIN 6798-A 8			
16	52101266	5	Bolt DIN 931 M8-65 8.8			
17	51030006	4	Washer DIN 125-6			
18	52103156	4	Bolt DIN 912 M6-16 8.8			

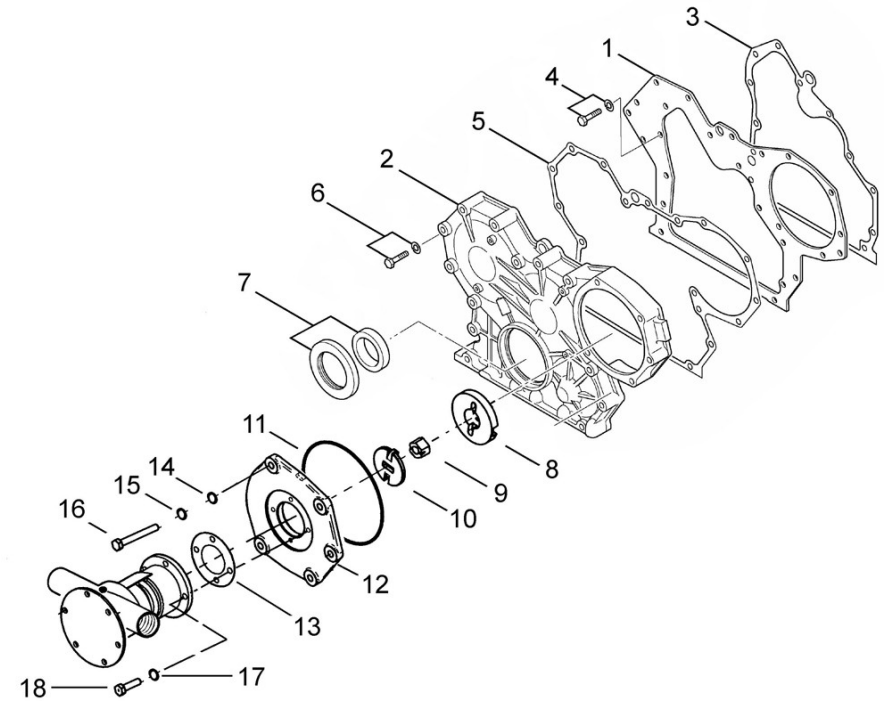

Engine Body

D_GG04_1_6			Cranckcase			
Fig.	Ref.	Qty.	Descr.	Obs	From	UpTo
1	17420001G.3	1	Crankcase Assy (Generator)			
2A	13320006	10	Cap, Sealing			
2B	(*)	6	Not available			
2C	(*1)	1	Not available			
2D	17420009	10	Bolt Bearing Cap			
3	13320007	4	Cap, Sealing			
4	17420027G.1	1	Plug,TAPPERED (Generator)			
5	17421046G.3	3	Plug			
6	17420013G.3	1	Plug			
7	17420036	2	Pin,Dowel			
8	13320025	2	Pin			
9	17120019	2	Pin, dowel			
10	17420012	6	Pin,Spring			
11	17420112	2	Seal,Valve			
12	17420011G.3	1	Bushing			
13	17420034	1	Shaft,IDLER			
14	17120022	1	Plug, tapered			
15	17820011	5	Plug, Tapered			
16	17620024.4	1	Plug TAPER			
17	17420003	1	METAL,MAIN Set STD			
18	17420004	1	METAL,MAIN Set -0,25			
19	17420005	1	METAL,MAIN Set -0,50			
20	17420006	1	METAL,MAIN Set -0,75			
21	17420109	3	Plate,THRUST.C/S STD			
22	17420110	3	Plate,THRUST.C/S +0,15			
23	17420111	3	Plate,THRUST.C/S +0,30			

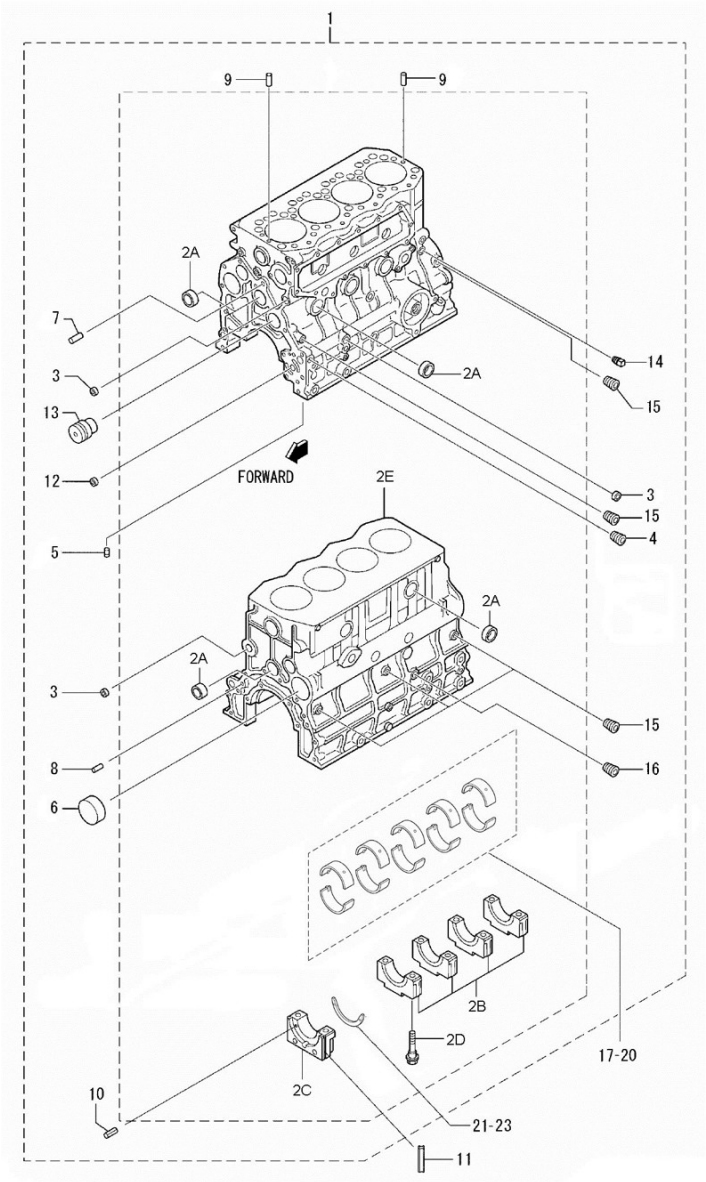

Engine Body

D_MI74GSTDN_01_7 Rear Plate

Fig.	Ref.	Qty.	Descr.	Obs	From	UpTo
1	17A20007G.3	1	Flyweel Housing Pickup			
2	17420025	1	Gasket,Rear			
3	17327129.2	10	Bolt			
4	17420028G.1	2	Bolt,W/Washer (Generator)			
5	13320063	1	Seal Oil			
6	13320067	2	Stud			
7	17827003	2	Nut			
8	17433010	2	Washer spring			
9	60972519	2	Magnetic Speed Sensor			
10	56000077	1	Washer 18-23-1,5			
11	13224045	1	Plug			
12	52211454	1	Stud ALLEN DIN913 M16x1,5-16			

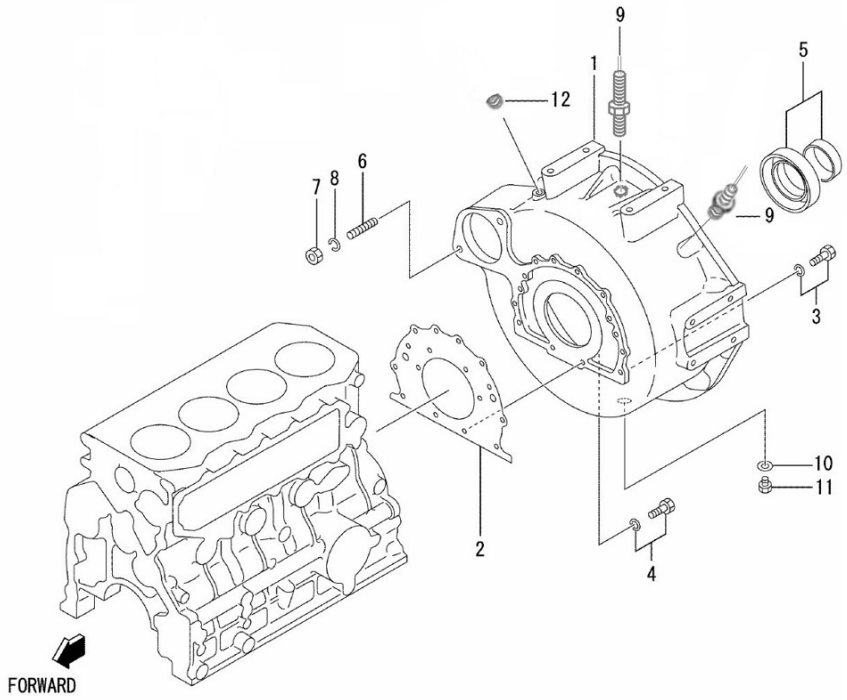

Engine Body

D_GG04_1_8 Piston & Connectiong Rod

Fig.	Ref.	Qty.	Descr.	Obs	From	UpTo
1	17422001G.1	4	Piston STD. (Generator)			
2	17422002G.1	4	Piston O.S 0.25 (Generator)			
3	17422003G.1	4	Piston O.S 0.50 (Generator)			
4	17422006G.1	4	Ring Set,Piston STD.(Generator)			
5	17422007G.1	4	Ring Set,Piston O.S 0.25 (Generator)			
6	17422008G.1	4	Ring Set,Piston O.S 0.50 (Generator)			
7	17422009	4	Pin,Piston			
8	17422010	8	Ring,Snap			
9	17822012	4	Rod Assy. Connecting			
9A	17822011	8	Nut			
9B	17122013	8	Bolt,connecting rod			
9C	17422033	4	Bushing,Con-Rod			
10	17422014	1	Bearing Set,Con-Rod,STD.			
11	17422015	1	Bearing Set,Con-Rod,U.S -0,25			
12	17822016	1	Bearing Set, Con-Rod, U.S 0,50			
13	17822017	1	Bearing Set, Con-Rod, U.S 0,75			

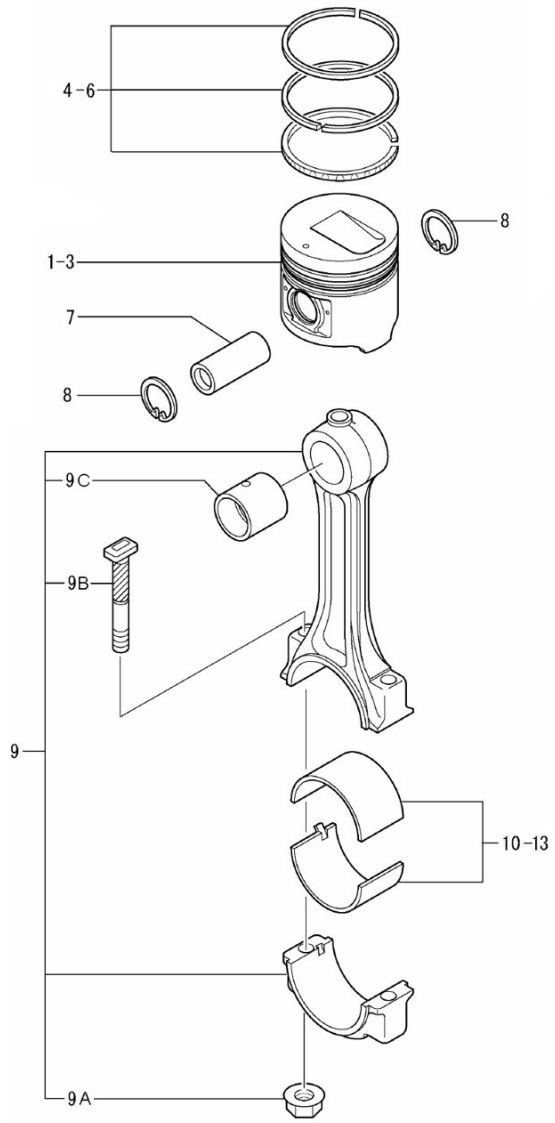

Engine Body

D_GG04_1_9 Crankshaft & Flywheel

Fig.	Ref.	Qty.	Descr.	Obs	From	UpTo
1	17422018	1	CrankShaft Assy			
2	13322059	2	Pin			
3	13322034	2	Key Woodruff			
4	(*)	1	Not available			
5	17422026	1	Nut,CrankShaft			
6	17422019	1	Gear,CrankShaft			
7	17422024	1	Pulley CrankShaft			
8	17422027	1	Flywheel Assy			
8A	17422029	1	Gear,Ring Z=122			
9	13322065	4	Bolt			
10	53033012	4	Washer Grower DIN 127-12			

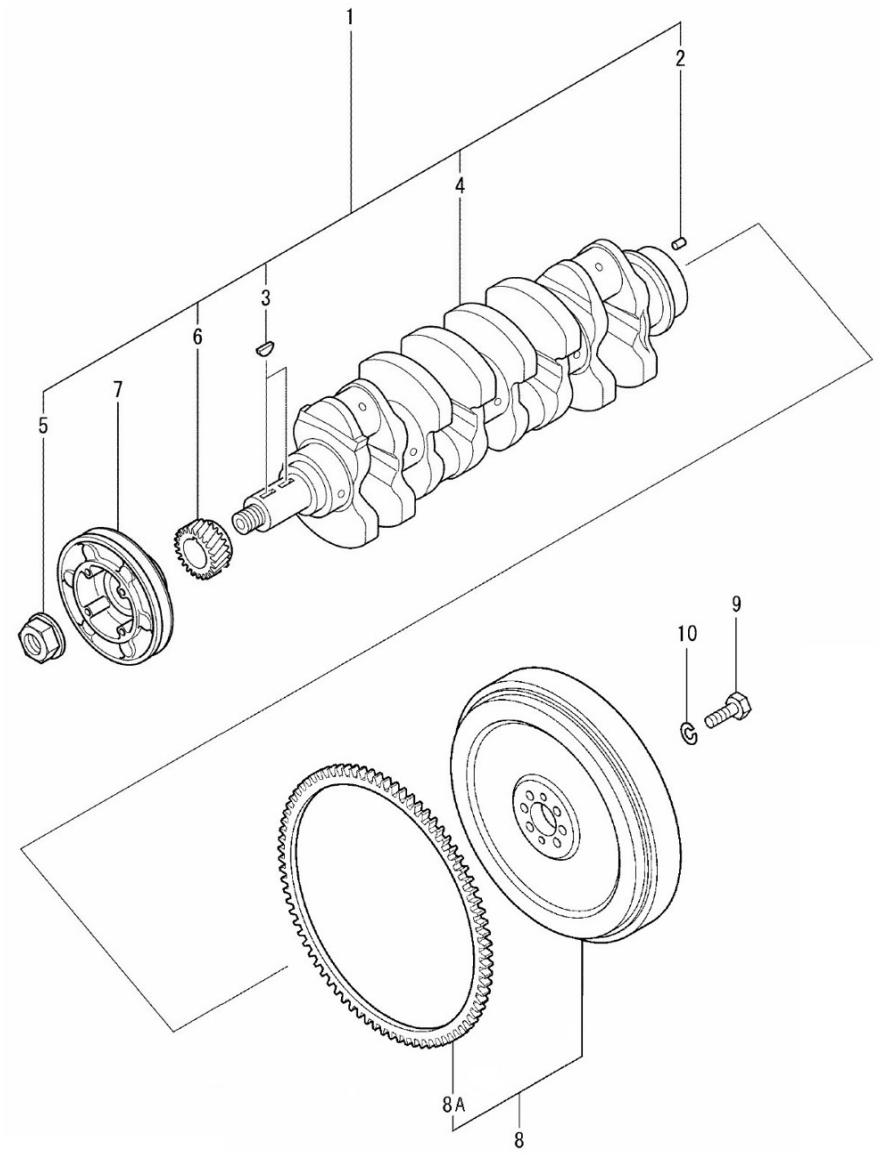

Engine Body

D_MI74GSTDN_01_10 Oil System

Fig.	Ref.	Qty.	Descr.	Obs	From	UpTo
1	17424040	1	Pump Assy,Oil			
2	17424055	1	O-Ring D. 60X2			
3	17421012G.1	4	Bolt W/Washer (Generator)			
4	13122045	1	Nut			
5	17433010	1	Washer spring			
6	17424052	1	STrainer,Oil			
7	17424060	1	O-Ring D. 22X2,4			
8	17422037G.1	2	Bolt W/Washer (Generator)			
9	17124072	1	Valve, Assy			
10	17424063	1	Gasket			
11	17424065G	1	Cover,CRANKCase Side			
12	17424062.1	1	Gasket,Side Cover			
13	17424051	1	Oil Filter Element MINI-74/SM-82/94			
14	17424054	1	Union,Oil Filter			
15	17821012	14	Bolt,W/Washer			
16	60994075	1	Temperature Sensor			
17	56000083	1	Washer 21-26-1,5			
18	17A17028	1	Conversion Adapter G1/2 a 3/8			
19	6097A072	1	Compact Pressure Switch			
20	56000067	2	Washer 13-20-1,5			
21	17A17037	1	Conversion Adapter R 1/8 A G1/4 G1/8			
22	60994076	1	Marine Approved Pressure Transmitters			
23	17A17035.1	1	Conversion Adapter G1/4 a G1/8 BSPT			

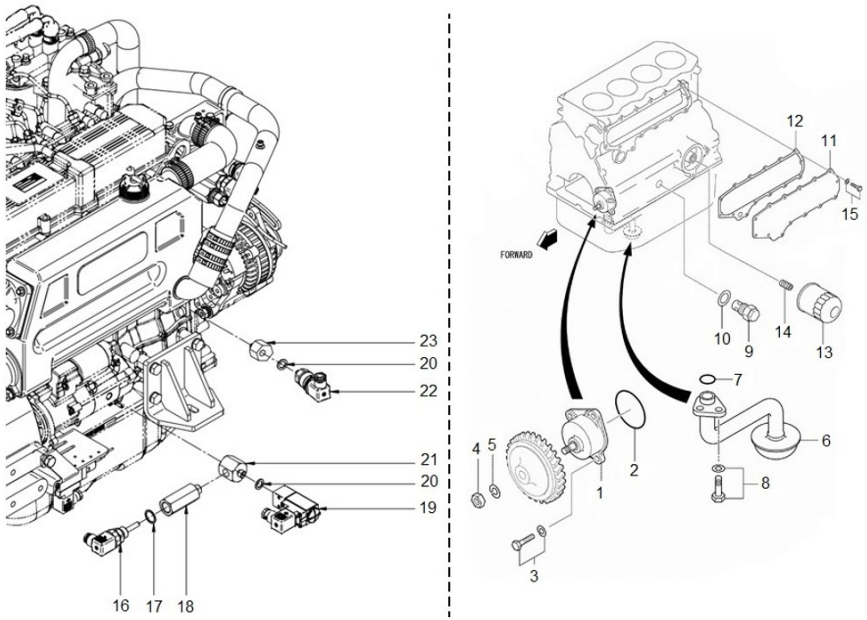

Engine Body

D_GG04_1_11 Oil Pan

Fig.	Ref.	Qty.	Descr.	Obs	From	UpTo
1	17420030	1	Oil PAN Assy			
2	17821012	24	Bolt,W/Washer			
3	12814051	1	Screw,eye			
4	56000069	2	Washer 14-20-1,5			
5	17114021	1	Extraction Hose			
6	52102360	1	Bolt DIN 933 M12-35 8.8			
7	17214022	1	Bracket, Pipe			
8	56000217	1	Washer 13-20-3			
9	16514020	1	Plug			
10	14714001	1	Oil Extraction Pump			
11	17420029	1	Gauge Oil LEVEL			
12	51030012	1	Washer DIN 125-12			
13	53033012	1	Washer Grower DIN 127-12			

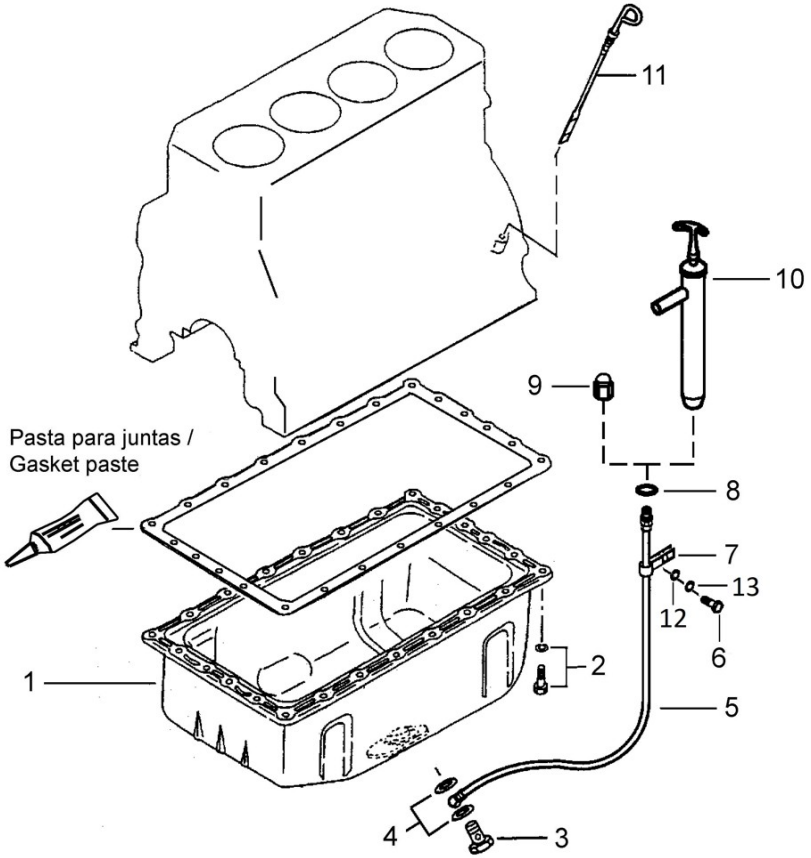

Engine Body

D_MI74GSTDN_01_12 Engine Brackets

Fig.	Ref.	Qty.	Descr.	Obs	From	UpTo
1	17410001G	2	Support ANTERIUER			
2	53033012	8	Washer Grower DIN 127-12			
3	52102359	8	Bolt DIN 933 M12-30 8.8			

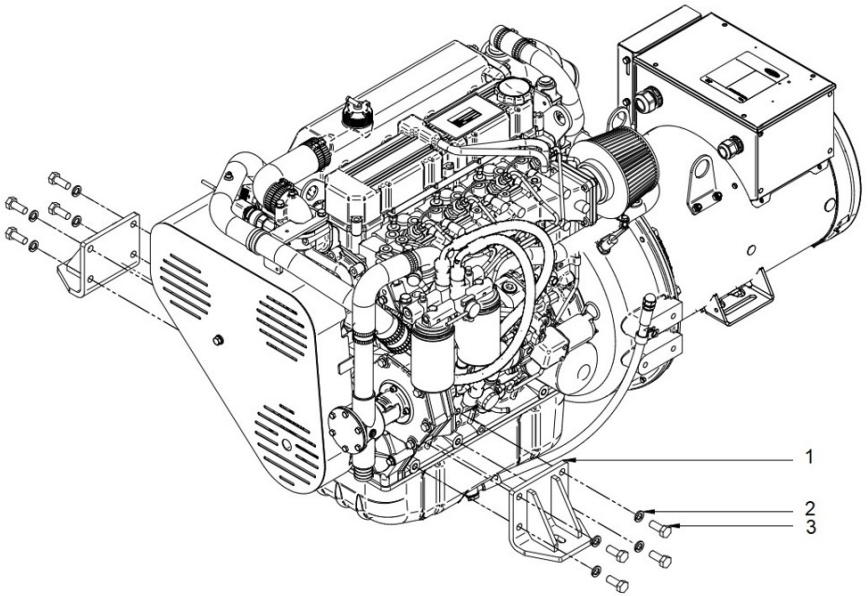

Engine Body

D_17410020R Drive Belt Guard For Genset Without Cabin

Fig.	Ref.	Qty.	Descr.	Obs	From	UpTo
1	51030008	3	Washer DIN 125-8			
2	53033008	3	Washer GROWER DIN 127-8			
3	52102257	1	Bolt DIN 933 M8-20 8.8			
4	52101265	2	Bolt DIN 931 M8-60 8.8			
5	17410021.6BIC	1	Spacer Zinc Plated White			
6	52113267	1	Rod DIN 913 M8-70 8.8			
7	17410020P	1	Belt Guard			
NS	17810022	1	Bracket Protection Belt			

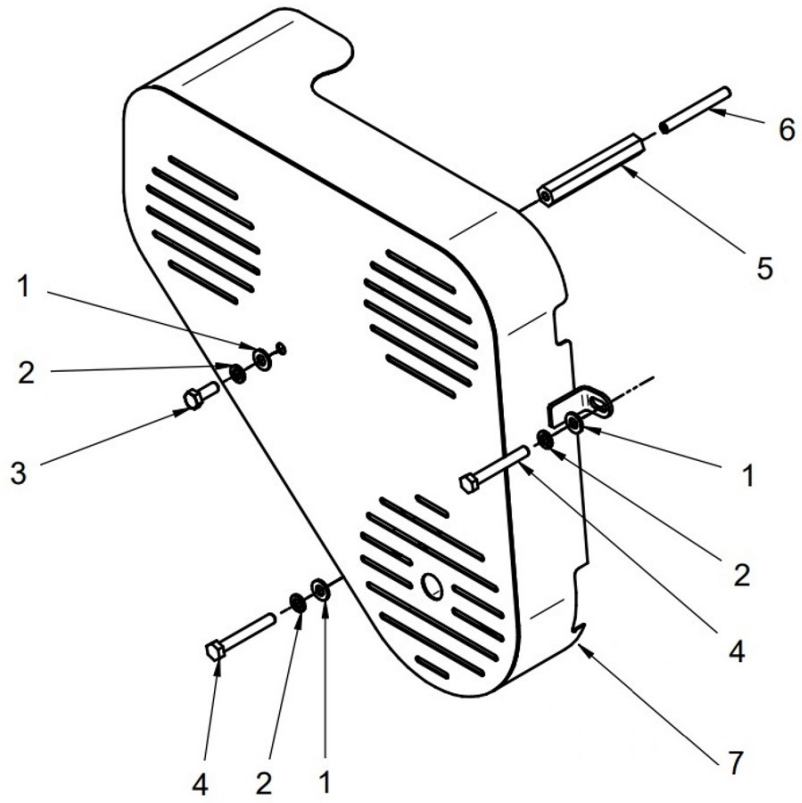

[NS] Not shown

Inlet & Exhaust

D_MI74GSTDN_02_1			Inlet			
Fig.	Ref.	Qty.	Descr.	Obs	From	UpTo
1	17421030	1	MANIFOld Assy,Inlet			
2	17421032	1	Gasket IN.MANIFOld			
3	17421014G.1	14	Bolt W/Washer (Generator)			
4	17421014G	2	Bolt (Generator)			
5	53033008	6	Washer GROWER DIN 127-8			
6	17421042	1	Gasket			
7	17421029	1	Pipe,Air Inlet			
8	52102258	4	Bolt DIN 933 M8-25 8.8			
9	17410032	1	Ring			
10	17410034	1	Air Filter			

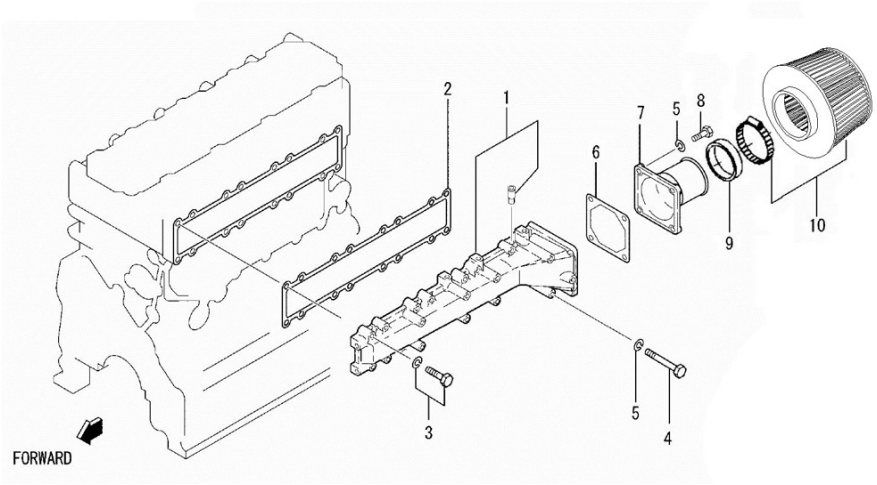

Cooling System

D_MI74GSTDN_03_1 Water Pump

Fig.	Ref.	Qty.	Descr.	Obs	From	UpTo
1A	17421020G4	1	Fresh Water Assy (tube 10)			
1B	17421020G.3	1	Fresh Water Pump			
1C	17421020G.2	1	Fresh Water Pump			
2	17421043	1	Cover,Water Pump			
3	17421022	1	Gasket,Pump Cover			
4	17421026G	1	Bolt,Flange			
5	17821026	2	Bolt, Flange			
6	17421041	1	Gasket,Side Cover			
7	17421039G.1	4	Bolt,W/Washer (Generator)			
8	17420062G.1	1	Bolt,W/Washer (Generator)			
9	17121021	1	Pulley,Water Pump			
10	17121027	1	Thermostat			
10A	52102256	4	Bolt DIN 933 M8-16 8.8			
10B	51030008	4	Washer DIN 125-8			
10C	53033008	5	Washer GROWER DIN 127-8			
11	17421037G.1	1	Case Assy (Generator)			
12	17421016G.2	1	Gasket (Generator)			
13	17821038	1	Bolt, Flange			
14	17821039	1	Bolt, Flange			
15	17421025G.1	1	Hose,BY-PASS (Generator)			
16	54081020	2	Clamp DIN 3017 20-32/9 W4			
17	17A17030	1	Conversion Adapter G1/4 a 5/8"SAE			
18	17A17031	1	Conversion Adapter G1/2 A 5/8 UNF			
19	17111021	1	Gasket			
20	52102259	1	Bolt DIN 933 M8-30 8.8			
21	17111020	1	Fitting,water outlet			
22	56000067	1	Washer 13-20-1,5			
23	56000053	1	Washer 6-10-1,5			
24	13811035	1	Bolt,bleed			
25	52101263	1	Bolt DIN 931 M8-50 8.8			
26	53038008	1	Washer DIN 6798-A 8			

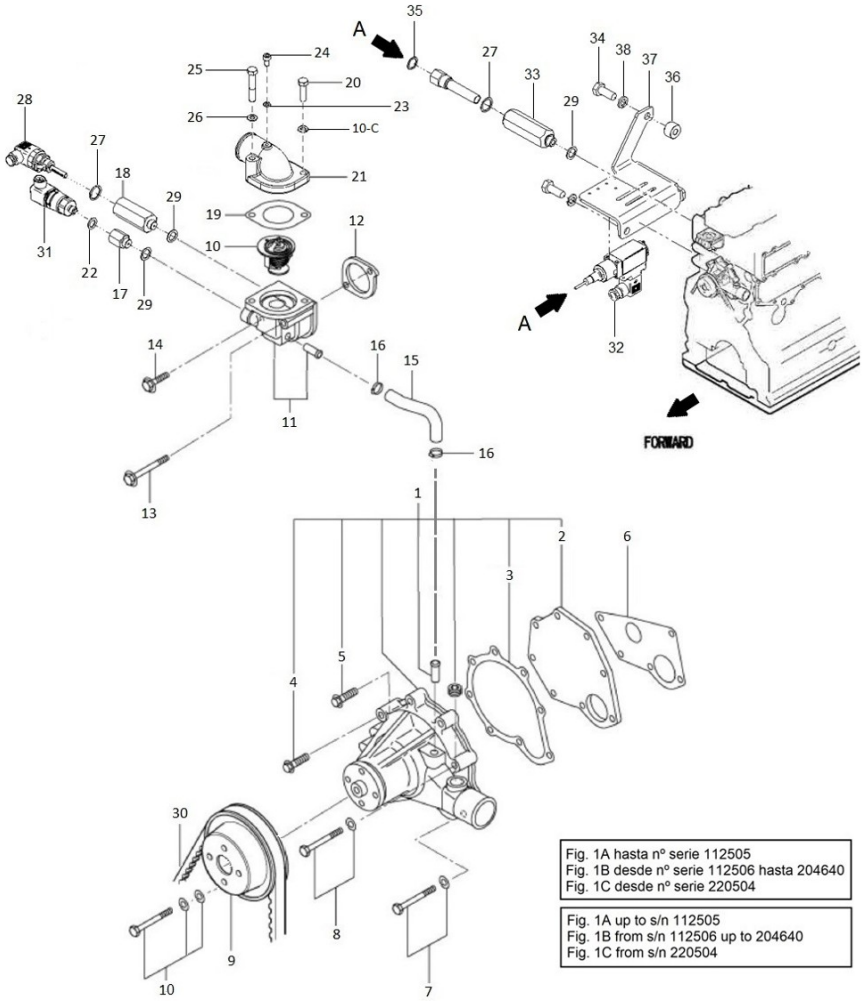

Cooling System

D_MI74GSTDN_03_1 Water Pump

Fig.	Ref.	Qty.	Descr.	Obs	From	UpTo
27	56000083	2	Washer 21-26-1,5			
28	60994075	1	Temperature Sensor			
29	56000073	3	Copper Washer 16-23-1,5			
30	17430010	1	Belt			
31	60994076	1	Marine Approved Pressure Transmitters			
32	6097A075	1	Thermostat DNV 95º Trafag			
33	17A17033	1	Conversion Adapter 5/8 UNF			
34	52102360	1	Bolt DIN 933 M12-35 8.8			
35	56000077	1	Washer 18-23-1,5			
36	19117011	1	Spacer 10,5X19X15			
37	17A17034	1	Sensor Bracket			
38	53033012	1	Washer Grower DIN 127-12			

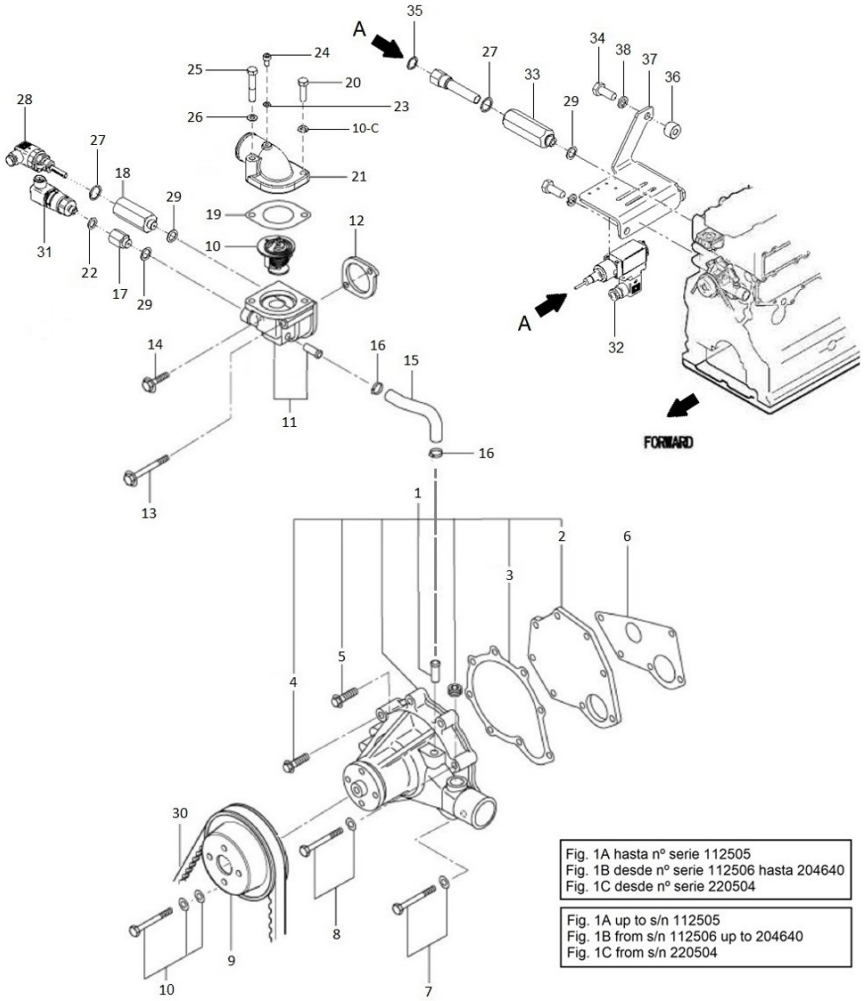

Cooling System

D_MI74GSTDN_03_2 Cooler Pipes

Fig.	Ref.	Qty.	Descr.	Obs	From	UpTo
1	60180007	1	Outlet Coupling			
2	36511000	1	Cross Brace Pump from 74 to 616			
3	17411042	1	Straight Brass Hose Connection			
4	54081025	16	Clamp DIN 3017 25-40/9 W4			
5	13211057	1	Rubber			
6	17411041	1	Brass Pipe D32			
7	13211037	1	Pipe 30-40-85			
8	17411023	1	Brass Pipe D32			
9	13611038	2	Pipe 30-40-75			
10	17421035	1	Gasket,Exhaust Manifold			
11	17411000DNVR	1	Water Cooler Assy (R)			
12	51125008	4	Nut Exhaust			
13	14711008	4	Stud,cover			
14	52102258	4	Bolt DIN 933 M8-25 8.8			
15	54082040	4	Clamp DIN 3017 40-60/12 W4			
16	17411013	1	Thermostat Water Outlet Elbow			
17	54081032	8	Clamp DIN 3017 35-50/9 W4			
18	17411024	1	Pipe,from cooler to engine D38 e2			
19	59071383	1	Clamp TYP.1 38/15 W1			
20	52103156	1	Bolt DIN 912 M6-16 8.8			
21	15211026	1	Elbow,rubber			
22	13811035	1	Bolt,bleed			
23	56000053	2	Washer 6-10-1,5			
24	52102308	1	Bolt DIN 933 M10-25 8.8			
25	53033010	1	Washer GROWER DIN 127-10			
26	15217010	1	Bracket,wirings			
27	52102157	1	Bolt DIN 933 M6-20 8.8			
28	59071304	1	Clamp RSGU 1 30/15 W1			
29	54120006	2	Nut DIN 934 M6 INOX			
30	17A10036	1	Stud M8-M6			
31	17A11014	1	Bracket			

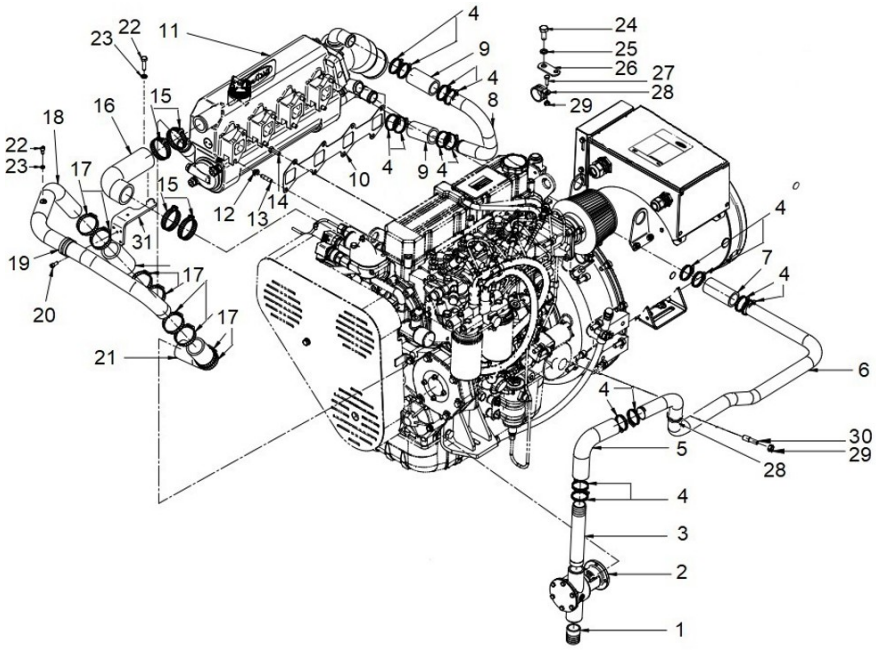

Cooling System

D_17411000DNVR Water Cooler Assy MINI-74 TAC (R)

Fig.	Ref.	Qty.	Descr.	Obs	From	UpTo
1	17811001DNV	1	Body, DNV Water Cooler			
2	18011004	1	Tubular Bundle			
3	18011008	2	O-Ring D. 72X3			
4	17411003	1	Water Cooler Cover			
5	16511007	4	Stud			
6	51030010	4	Washer DIN 125-10			
7	53033010	4	Washer GROWER DIN 127-10			
8	52120010	4	Nut DIN 934 M10 8.8			
9	56000205	1	Washer 10-16-3			
10	54102306	1	Bolt DIN 933 M10-16 INOX.			
11	56000073	2	Copper Washer 16-23-1,5			
12	12111076	1	Plug			
13	18011002	1	Water Cooler Cover			
14	18011031	1	Engine Anode 45 mm M.8			
15	18011009	1	Anode Plug			
16	12113092	1	Plug			
17	13811010	1	Cap			
18	17111011	1	Elbow 1 1/8"			
19	16513002	1	Exhaust Elbow Gasket			
20	14711008	4	Stud,cover			
21	51125008	8	Nut Exhaust			
22	52102258	4	Bolt DIN 933 M8-25 8.8			
23	53038008	4	Washer DIN 6798-A 8			
24	56000077	1	Washer 18-23-1,5			
25	19411027	1	Plug			
26	19613016	4	Turbo Stud M8-M10			
27	14711021	1	Elbow Nº1			
28	14711030	1	Brass Elbow Connector			
NS	17411040	1	Label MINI-74			

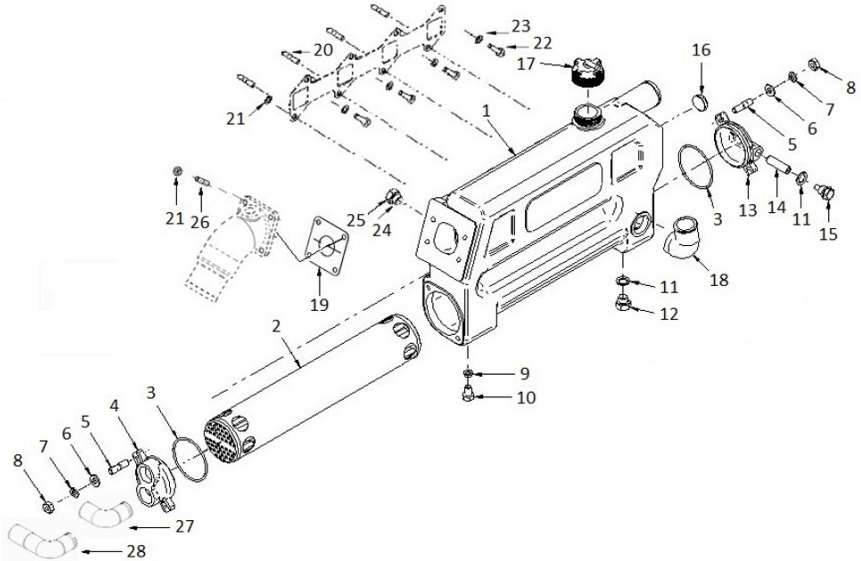

[NS] Not shown

Cooling System

D_MI74GSTDN_03_4 Wet Exhaust

Fig.	Ref.	Qty.	Descr.	Obs	From	UpTo
1	16613015	1	Elbow, wet exhaust			
2	16513002	1	Exhaust Elbow Gasket			
3	14711021	1	Elbow N°1			
4	19613016	4	Turbo Stud M8-M10			
5	53033008	4	Washer GROWER DIN 127-8			
6	54120008	4	Nut DIN 934 M8			

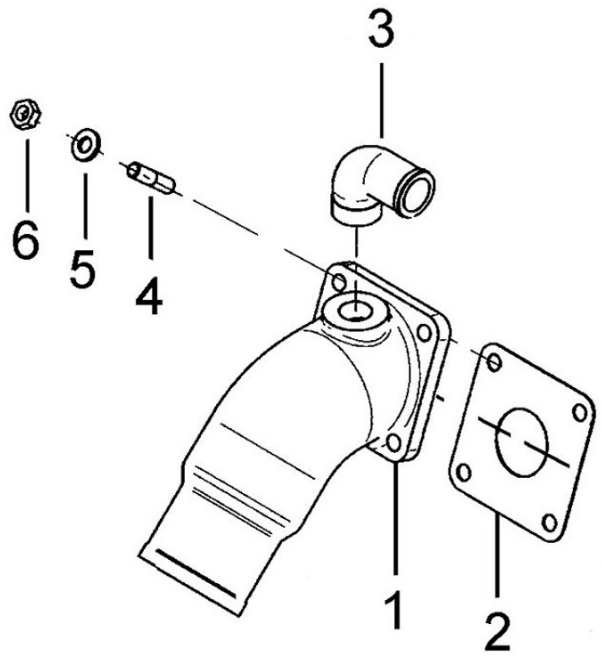

Cooling System

36511000 Cross Brace Pump from 74 to 616

Fig.	Ref.	Qty.	Descr.	Obs	From	UpTo
1	34711002	1	Cover Pump			
2	34711003	1	Gasket Cover			
3	34711041	1	Impeller Plug			
4	34711008	1	1" Impeller			
5	34711005	1	Cam			
6	34711026	1	Plate,Friction			
7	54040016	1	CIRClip E-16			
8	36511018	1	Washer,seal			
9	36511019	1	Seal			
10	33311013	1	O-Ring D. 15X2			
11	36511001	1	Body,water pump			
12	36511017	1	Pin,Dowel			
13	54108154	1	Bolt DIN 84 M6-10			
14	54102154	6	Bolt DIN 933 M6-10 INOX			
15	36511010	1	Shaft,pump			
16	36511015	1	Spacer 17X24X7			
17	33311014	2	Ball Bearing 6203			
18	53040017	1	Circlip DIN 471 E-17			
19	36511020	1	Seal 16-30-7			
20	53041040	1	Circlip DIN 472 I-40			

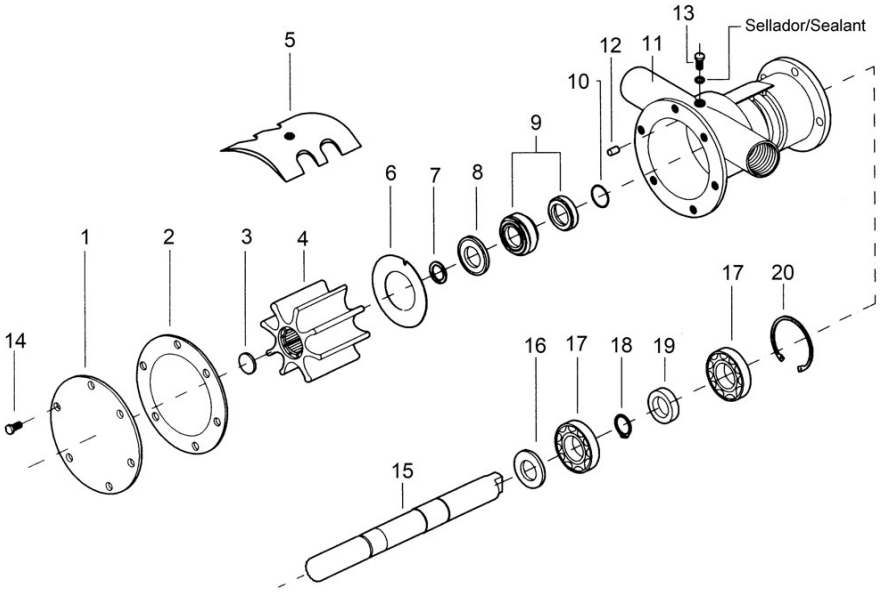

Fuel System

D_MI74GSTDN_04_1 Fuel Pipe And Fuel Leak Alarm

Fig.	Ref.	Qty.	Descr.	Obs	From	UpTo
0A	17425001G	1	Pump Assy,Injection (Generator)			
0B	17425001G.2	1	Pump Assy,Injection (Generator)			
1	13824013	4	Injector Washer			
2	17424025G.1	4	Gasket Fuel Return (Genset)			
3	13824024	4	Nut			
4	17420047	1	O-Ring D. 140X2			
5	17425005	1	Flange,INJ.Pump			
6	17425028	1	Gasket			
7	17721012	1	Bolt,W/Washer			
8	17425029	4	Bolt,W/Washer			
9	17414010	1	Joint Fuel inlet			
10	56000205	1	Washer 10-16-3			
11	17414011	1	Racord			
12	17424025G.2	1	Bolt			
13	17424032	1	Connector			
14	17424033	1	Pipe,Oil			
15	17424034	1	Bracket,INJ.Pump			
16	53033008	1	Washer GROWER DIN 127-8			
17	17120049	1	Nut M8			
18	17424005	1	Pipe,Fuel			
19	17425036	1	Bolt,Flange			
20	17424010R	1	Pipe Kits			
21	51030012	2	Washer DIN 125-12			
22	52102157	4	Bolt DIN 933 M6-20 8.8			
23	53033006	7	Washer GROWER DIN 127-6			
24	51031006	3	Washer DIN 9021 6			
25	17A17011	6	Bakelite Bushing			
26	17A17009	1	Fuel Leak Alarm Bracket,Earth Isolated			
27	52102360	2	Bolt DIN 933 M12-35 8.8			
28	17414009	3	Anti Vibration Mount			
29	17517009.6	1	Alarm Bracket			

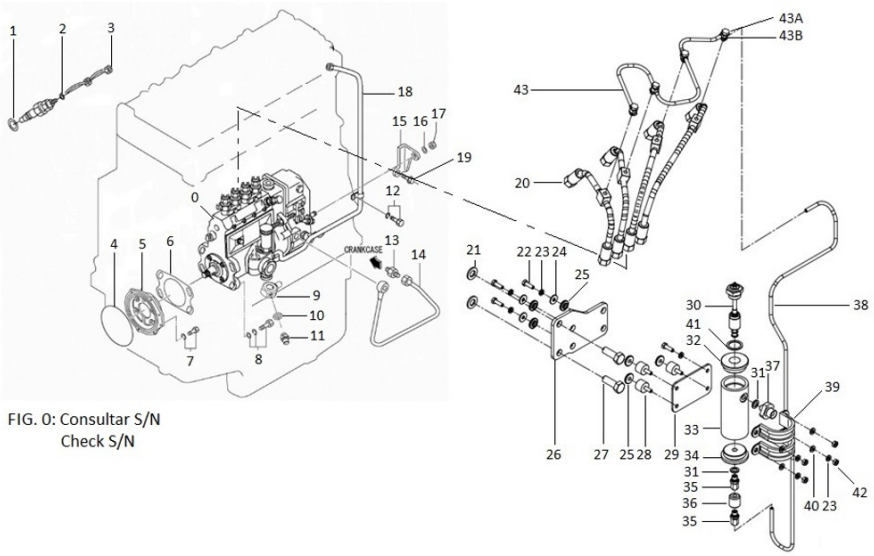

FIG. 0: Consultar S/N
Check S/N

Fuel System

D_MI74GSTDN_04_1 Fuel Pipe And Fuel Leak Alarm

Fig.	Ref.	Qty.	Descr.	Obs	From	UpTo
30A	17517009.1	1	Fuel Leak Switch 12V			
	Figure A for Standard System					
30B	17517017.1	1	Fuel Leak Switch 24V			
	Figure b for Parallel System					
31	56000061	2	Washer 10-16-1,5			
32	17517009.3	1	Cover, Upper			
33	17517009.2	1	Tube			
34	17517009.4	1	Lower cover			
35	19414028	3	P-GEV 6LR 1/8			
36	17A14029	1	1/8-28 To M10 Threat Adaptator			
37	17B14032	1	Fitting 1/8 - 3/8 Nylon			
38	17414020	1	Fuel Pipe			
39	59072482	2	Clamp 2 48/20 W1			
40	51030006	5	Washer DIN 125-6			
41	56000086	1	Washer 22,3-29-1,5			
42	52120006	4	Nut DIN 934 M6 8.8			
43	17414019	1	Assy,Fuel Return			
43A	13114007	4	Banjo Short Bolt			
43B	56000057	8	Washer 8-13-1,5			
NS	19424101	1	Spray stop kit			
NS	58018160	1	Screw			
NS	59071064	2	Clamp RSGU 1 06/15 W1			

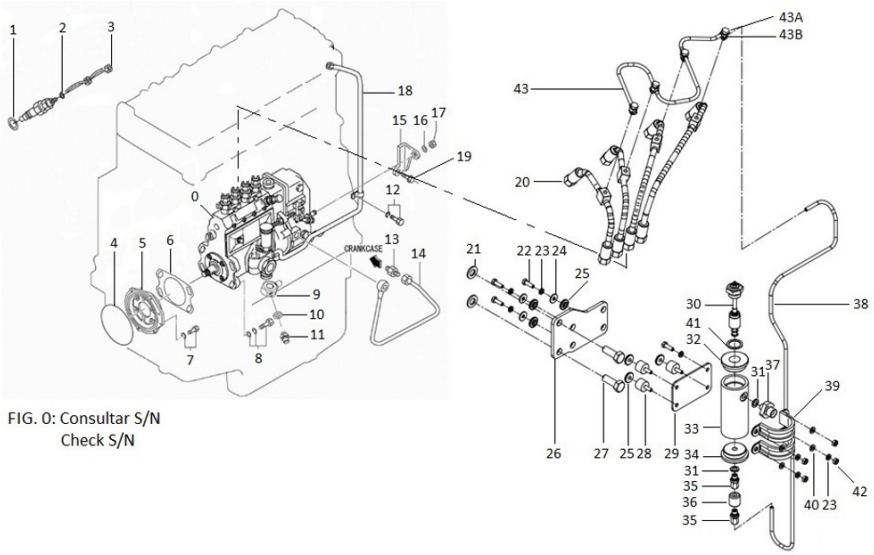

FIG. 0: Consultar S/N
Check S/N

[NS] Not shown

Fuel System

D_GG04_4_2 Injection Nozzle

Fig.	Ref.	Qty.	Descr.	Obs	From	UpTo
1	13826001	4	Nozzle & Holder A			
2	17426003	4	Fuel Injector			
2A	13826002	4	Body Assy			
2B	13826003	4	Pin Pressure			
2C	17226004	4	Spring, Pressure			
2D	17426006	4	Nut			
2E	13826007	4	PIECE DISTANCE			
2FA	13826010	4	Washer 1,25			
2FB	13821029	4	Pipe Intake			
2FC	13826012	4	Washer 1,35			
2FD	13826013	4	Washer 1,40			
2FE	13826014	4	Washer 1,45			
2FF	13826015	4	Washer 1,50			
2FG	13826016	4	Washer 1,55			
2FH	13826017	4	Washer 1,60			
2FI	13826019	4	Washer 1,65			
2FJ	13826020	4	Washer 1,70			
3	13826018	4	Nozzle Assy			

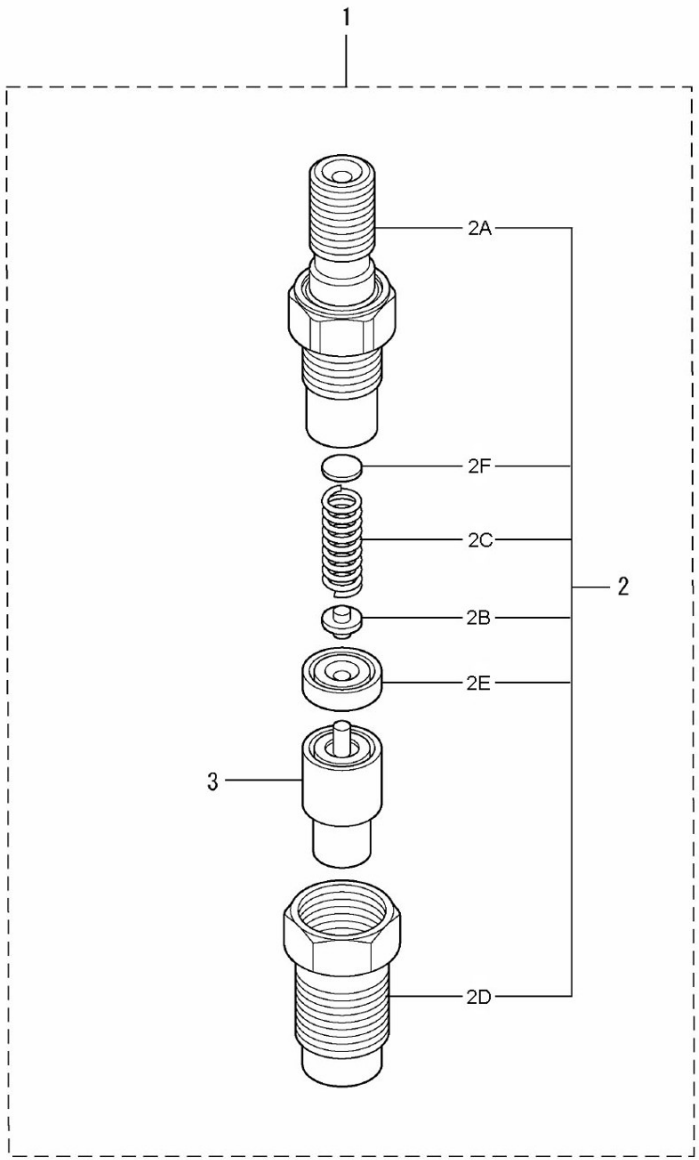

Fuel System

D_MI74GSTDN_04_3 Governor Parts

Fig.	Ref.	Qty.	Descr.	Obs	From	UpTo
1	17223032	5	Nut			
2	53033006	4	Washer GROWER DIN 127-6			
3A	17424025G	1	Solenoid			
	Figure A for 12V System					
3B	17425264.2	1	Solenoid 24V			
	Figure b for 24V System					
3C	60972516	1	G.A.C 175 Series 12V Integrated Actuator			
	Figure C for Parallel System 12V					
3D	60972520	1	G.A.C. 175 Series 24V Integrated Actuat.			
	Figure D for Parallel System 24V					
4	17427003G	2	Rod,Solenoid			
5	17427005G	1	Bracket			
6	51030006	2	Washer DIN 125-6			
7	17427006G	1	ROD,Support			
8B	60972518	1	Assembly kit for 175 series actuator			
	Figure b for Parallel System					

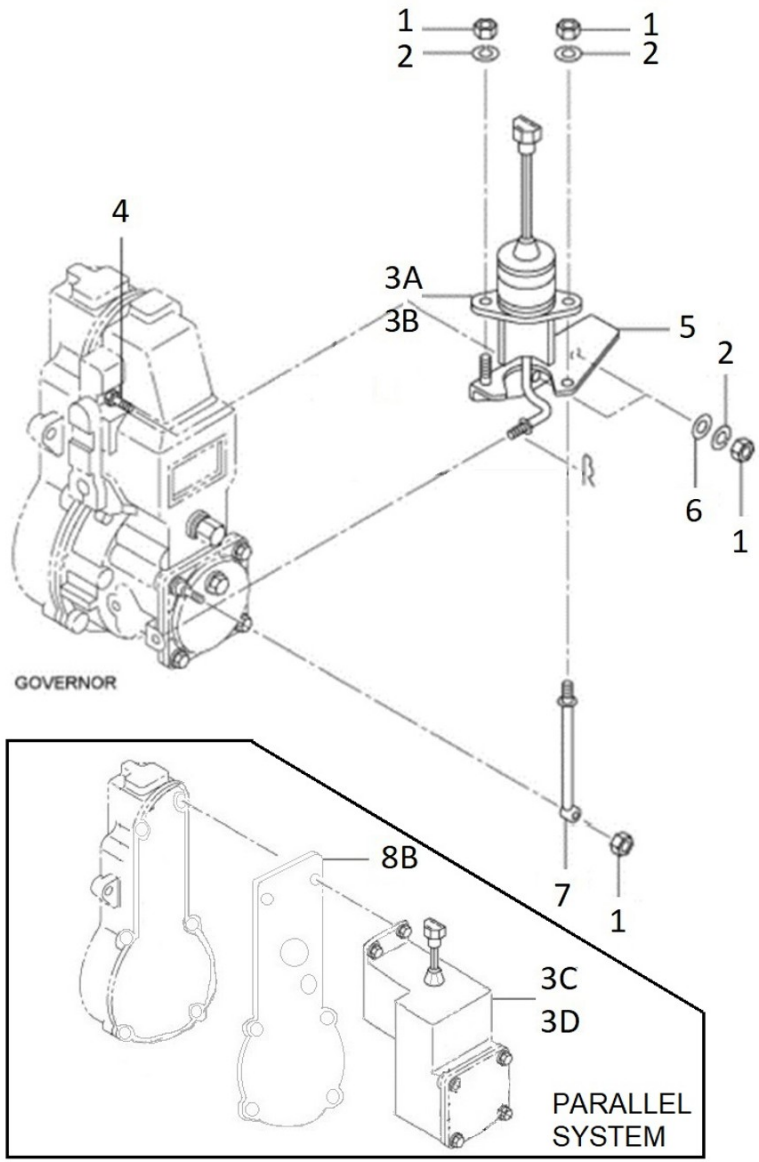

Fuel System

D_17414000DNV Kit 2nd Fuel Filter (Without Cabin) TAC

Fig.	Ref.	Qty.	Descr.	Obs	From	UpTo
1	17414003	1	Bracket 2nd Filter			
2	17414002	1	Bracket			
3	19424022	2	Fuel Filter Element SDZ-165/205/280			
4	57000378	4	Washer 18-24-1,5			
5	51030010	4	Washer DIN 125-10			
6	53033010	4	Washer GROWER DIN 127-10			
7	52120010	2	Nut DIN 934 M10 8.8			
8	52101312	2	Bolt DIN 931 M10-45 8.8			
9	52101261	2	Bolt DIN 931 M8-40 8.8			
10	19117014	2	Spacer 10,5X20X20			
11	53033008	2	Washer GROWER DIN 127-8			
13	19414024	2	Fitting Adapter Male 3/8" to M14x1.5			
14	19414039	2	Racor Fitting Male M18x150-M20x150			
15	17A14004	1	Fuel Hose DNV			
16	17A14005	1	Fuel Hose DNV			
17	56000069	4	Washer 14-20-1,5			
NS	52102308	2	Bolt DIN 933 M10-25 8.8			

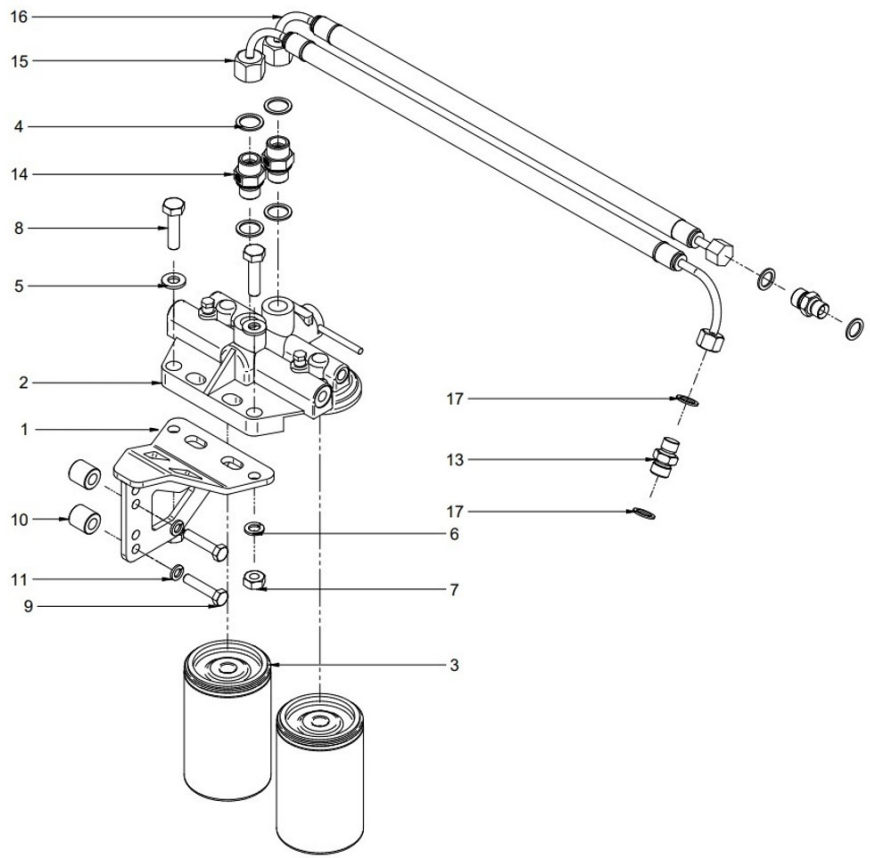

[NS] Not shown

Fuel System

D_17414000IDNV Kit 2nd Fuel Filter (Cabin)

Fig.	Ref.	Qty.	Descr.	Obs	From	UpTo
1	52102308	2	Bolt DIN 933 M10-25 8.8			
2	53033010	4	Washer GROWER DIN 127-10			
3	51030010	2	Washer DIN 125-10			
4	19414039	2	Racor Fitting Male M18x150-M20x150			
5	57000378	2	Washer 18-24-1,5			
6	17A14004	2	Fuel Hose DNV			
7	17414002	1	Bracket			
8	17414003I	1	Bracket 2nd Filter			
9	52120010	2	Nut DIN 934 M10 8.8			
10	19424022	2	Fuel Filter Element SDZ-165/205/280			
11	52101311	2	Bolt DIN 931 M10-40 8.8			
12	56000069	2	Washer 14-20-1,5			
13	19414024	2	Fitting Adapter Male 3/8" to M14x1.5			

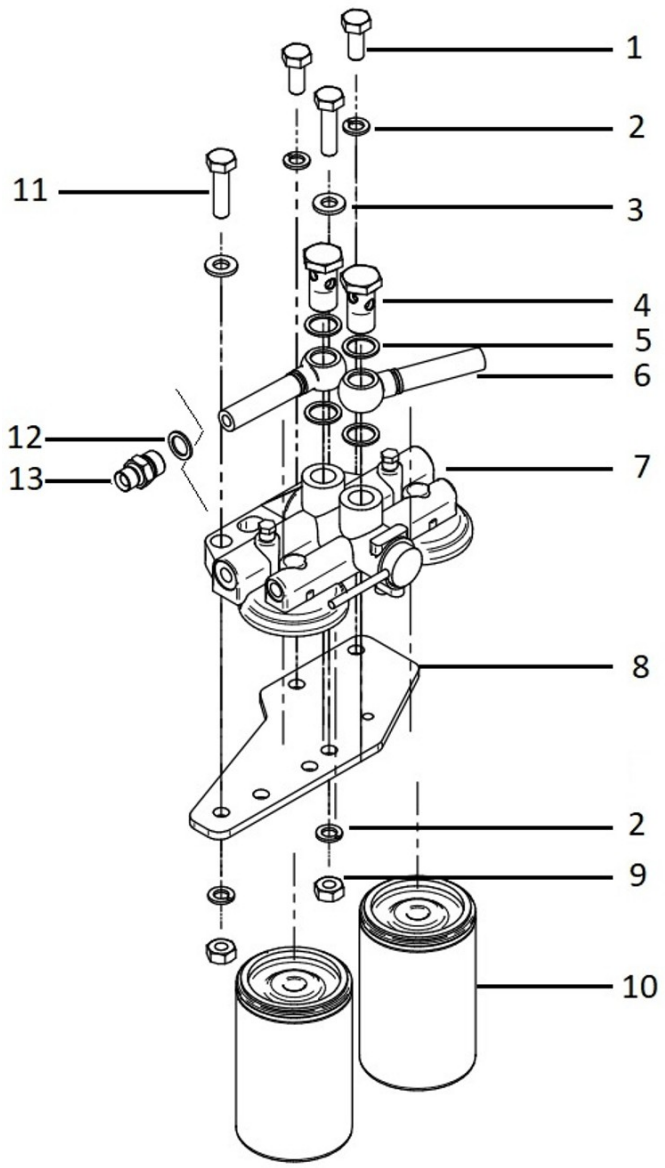

Electrical System

D_MI74GSTDN_05_1			Electrical System 12V			
Fig.	Ref.	Qty.	Descr.	Obs	From	UpTo
1	17430010	1	Belt			
2	17427011G	1	Alternator 12V/50A			
3	17427007G.2	1	Plate, Adjusting Generator - 2-PoleS			
4	17425036	2	Bolt,Flange			
5	17331008	1	Washer			
6	13827012	1	Bolt			
7	53033010	2	Washer GROWER DIN 127-10			
8	52101325	1	Bolt DIN 931 M10-120 8.8			
9	17427002G.1	1	Alternator Bracket, Earth Isolated			
10	17117012	2	Tensor Bakelite Bushing			
11	17427001G	1	Starter Assy 12 V			
12	17127017	4	Plug, glow			
13	17427018	1	Plate Glow Plug			
14A	17424025G	1	Solenoid			
	Figure A for Standard System					
14B	60972516	1	G.A.C 175 Series 12V Integrated Actuator			
	Figure b for Parallel System					
15A	60974217	1	Elect. Inst. G. MINI-74 DNV			
	Figure A for Standard System					
15B	60974216	1	Elect. Inst. G. MINI-74 DNV Prep. Paral.			
	Figure b for Parallel System					
16	17417033	1	Support, Relay			
17	17527005	2	Relay 12V 200A			
18	52102154	4	Bolt DIN 933 M6-10 8.8			
19	52102258	4	Bolt DIN 933 M8-25 8.8			
20	19017113	1	Relay 12V Earth Isolated Nagares			
21	52102153	2	Bolt DIN 933 M6-8 8.8			
22	51030010	2	Washer DIN 125-10			
23	52120010	1	Nut DIN 934 M10 8.8			
24	17117011	2	Bracket Bakelite Bushing			
NS	60900956	1	10k ohm Resistor			

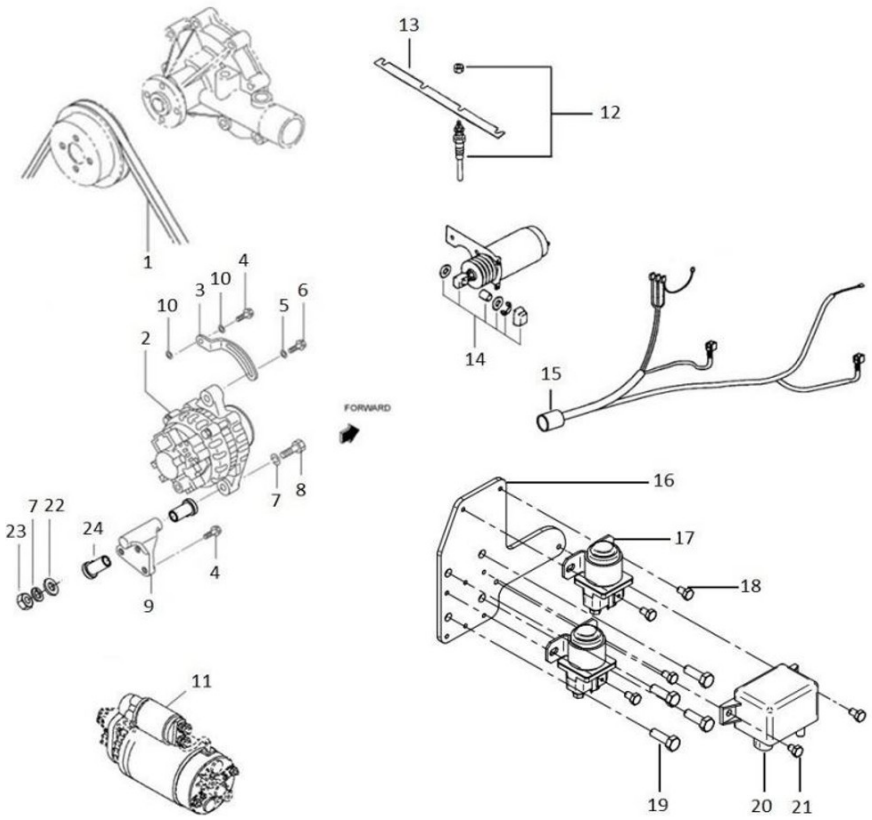

[NS] Not shown

Electrical System

D_MI74GSTDN_05_2			Electrical System 24V			
Fig.	Ref.	Qty.	Descr.	Obs	From	UpTo
1	17117012	2	Tensor Bakelite Bushing			
2	17427007G.2	1	Plate, Adjusting Generator - 2-PoleS			
3	17417024	1	Alternator 28V/55A			
4	52120010	1	Nut DIN 934 M10 8.8			
5	53033010	1	Washer GROWER DIN 127-10			
6	51030010	2	Washer DIN 125-10			
7	17117011	2	Bracket Bakelite Bushing			
8	17427002G.1	1	Alternator Bracket, Earth Isolated			
9	13827012	1	Bolt			
10	52101325	1	Bolt DIN 931 M10-120 8.8			
11	17430010	1	Belt			
12	17527001.2	1	Starter Assy 24V			
13	17427018	1	Plate Glow Plug			
14	17527017.2	4	Glow Plug 24V			
15	17417020	1	Pulley Alternator			
16A	60974217	1	Elect. Inst. G. MINI-74 DNV			
	Figure A for Standard System					
16B	60974216	1	Elect. Inst. G. MINI-74 DNV Prep. Paral.			
	Figure b for Parallel System					
17	60972518	1	Assembly kit for 175 series actuator			
18A	17425264.2	1	Solenoid 24V			
	Figure A for Standard System					
18B	60972520	1	G.A.C. 175 Series 24V Integrated Actuat.			
	Figure b for Parallel System					
19	17417033	1	Support, Relay			
20	17527006	1	Glow Relay 24V			
21	52102154	3	Bolt DIN 933 M6-10 8.8			
22	17417005	1	Relay 24V 24-100			
23	52102258	1	Bolt DIN 933 M8-25 8.8			
24	19017113	1	Relay 12V Earth Isolated Nagares			
25	52102153	2	Bolt DIN 933 M6-8 8.8			

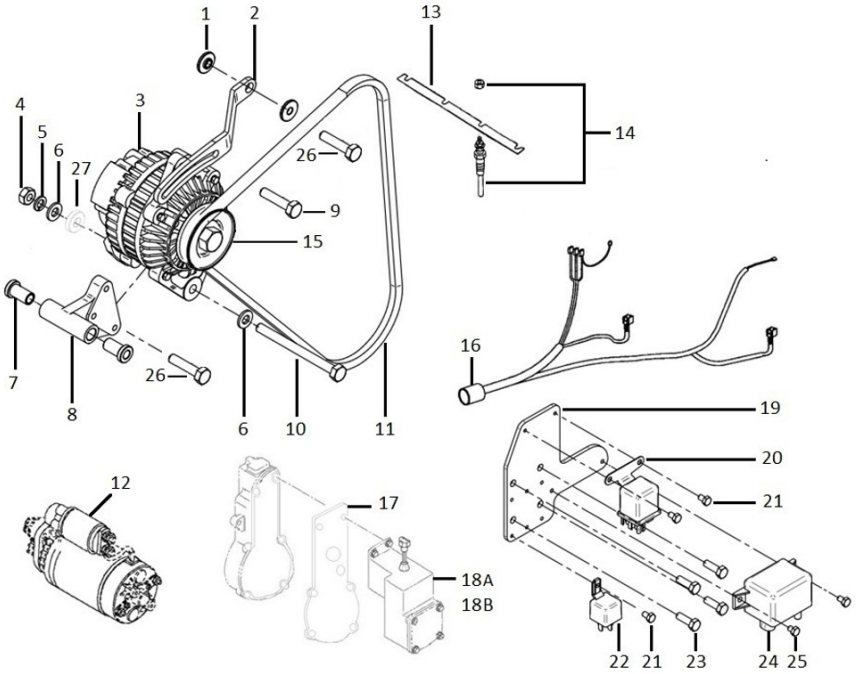

Electrical System

D_MI74GSTDN_05_2 Electrical System 24V

Fig.	Ref.	Qty.	Descr.	Obs	From	UpTo
26	17425036	2	Bolt,Flange			
27	17617006	1	Spacer 6,5X12X5			
NS	60900956	1	10k ohm Resistor			

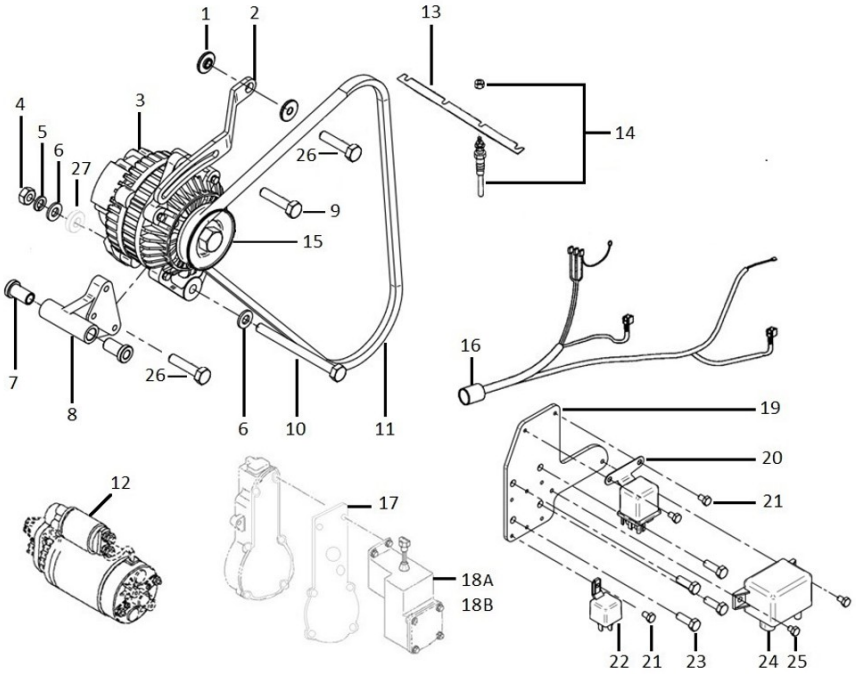

[NS] Not shown

Electrical System

D_60971606 Parallel Control System 12V

Fig.	Ref.	Qty.	Descr.	Obs	From	UpTo
1	60972521	1	Speed Control Unit G.A.C. ESD-5500 Ser.			
2	17317007	1	Electronic Unit Bracket			
3	17A14009	4	Anti Vibration Mount M6			
4	51030006	8	Washer DIN 125-6			
5	53033006	8	Washer GROWER DIN 127-6			
6	52120006	4	Nut DIN 934 M6 8.8			
7	59071224	1	Clamp RSGU 1 22/15 W1			15/11/2023
7	59071324	1	Clamp RSGU 1 32/15 W1		15/11/2023	
8	52102156	1	Bolt DIN 933 M6-16 8.8			
9	60972516	1	G.A.C 175 Series 12V Integrated Actuator			
10	17317008	1	Parallel electronic unit cover			
11	52102154	3	Bolt DIN 933 M6-10 8.8			
12	63900028	1	Relay 12V 20/30A NO+NC			
13	60972518	1	Assembly kit for 175 series actuator			
NS	58088284	1	Pastic Cable Zip Tie			
NS	60972517	1	Connector for actuator Packard type			
NS	60974223DNV	1	Auxiliary Installation Parallel TAC Genset			

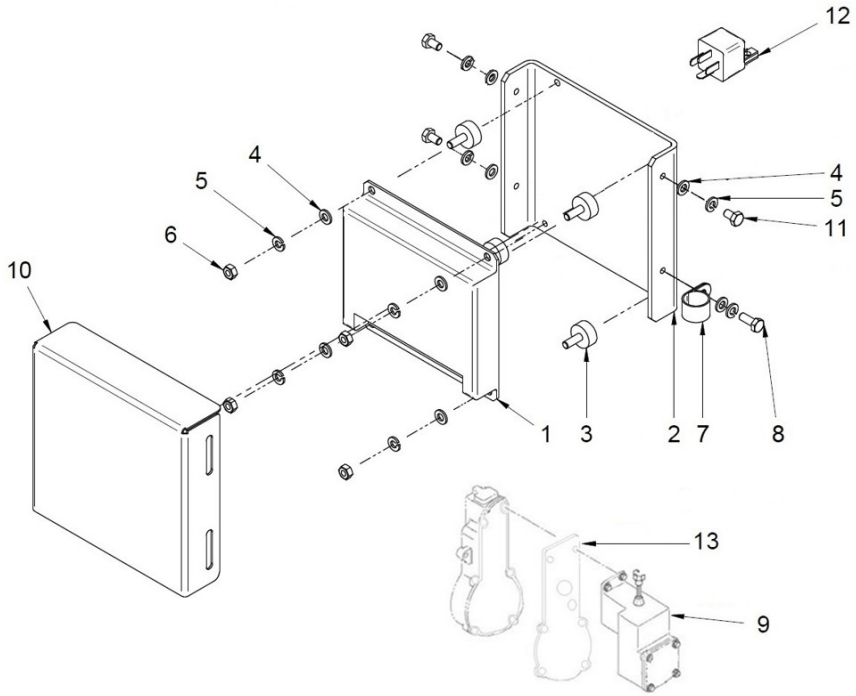

[NS] Not shown

Electrical System

D_60971532 Parallel Control System 24V

Fig.	Ref.	Qty.	Descr.	Obs	From	UpTo
1	60972521	1	Speed Control Unit G.A.C. ESD-5500 Ser.			
2	17317007	1	Electronic Unit Bracket			
3	17A14009	4	Anti Vibration Mount M6			
4	51030006	8	Washer DIN 125-6			
5	53033006	8	Washer GROWER DIN 127-6			
6	52120006	4	Nut DIN 934 M6 8.8			
7	59071224	1	Clamp RSGU 1 22/15 W1			15/11/2023
7	59071324	1	Clamp RSGU 1 32/15 W1		15/11/2023	
8	52102156	1	Bolt DIN 933 M6-16 8.8			
9	63900029	1	Relay 24V 10/20A NO+NC			
10	17317008	1	Parallel electronic unit cover			
11	52102154	3	Bolt DIN 933 M6-10 8.8			
12	60972520	1	G.A.C. 175 Series 24V Integrated Actuat.			
13	60972518	1	Assembly kit for 175 series actuator			
NS	17420007G.3M	1	Flyweel Housing Pickup	NS		
NS	17420025	1	Gasket,Rear	NS		
NS	60972517	1	Connector for actuator Packard type	NS		
NS	60972519	2	Magnetic Speed Sensor	NS		
NS	60974223DNV	1	Auxiliary Installation Parallel TAC Genset	NS		

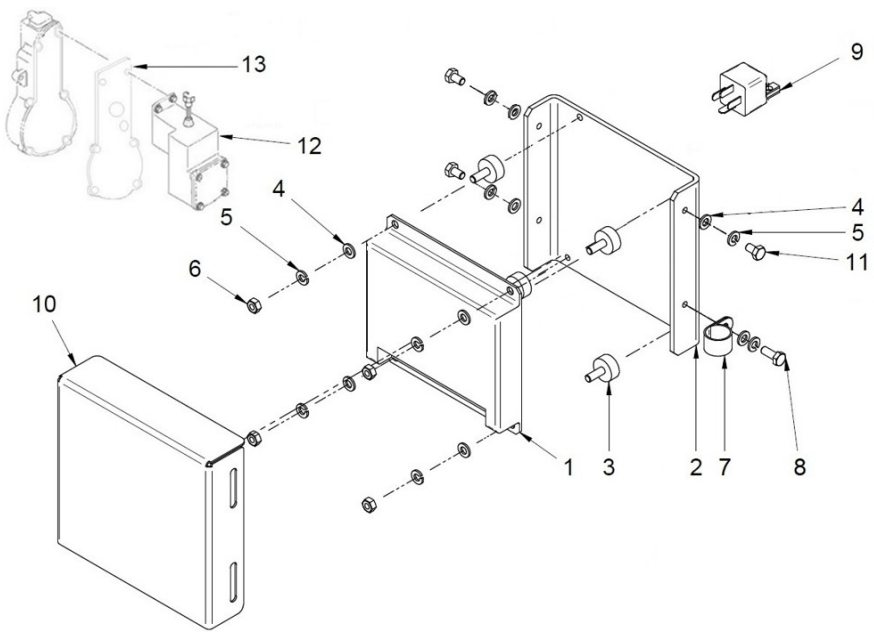

[NS] Not shown

Electrical System

D_MI74GSTDN_05_4 Control and Power Cabinets

Fig.	Ref.	Qty.	Descr.	Obs	From	UpTo
1C	6097A215	2	Box CO 40 17/25/35/45/50/68 GT TAC 12V			
1C	6097A217	1	Box CO 40 17/25/35/45/50/68 GT TAC 12V Prep.Par.			
1D	6097A219	1	Box CO 40 17/25/35/45/50/68 GT TAC 24V Prep.Par.			
1D	6097A220	2	Box CO 40 17/25/35/45/50/68 GT TAC 24V			
2A	60974719	1	Parallel Kit 29 GS 230V TAC Control and Power 12V			
2B	60971720	1	Parallel Kit 29 GS 230V TAC Control and Power 24V			
2C	60971725	1	Parallel Kit 32 GSA 240V TAC Control and Power 12V			
2D	60971726	1	Parallel Kit 32 GSA 240V TAC Control and Power 24V			
2E	60974727	1	Parallel Kit 35 GT 230V TAC Control and Power 12V			
2F	60974728	1	Parallel Kit 35 GT 230V TAC Control and Power 24V			
2G	60974729	1	Parallel Kit 35 GT 400/230V TAC Control and Power 12			
2H	60974730	1	Parallel Kit 35 GT 400/230V TAC Control and Power 24			
2I	60971732	1	Parallel Kit 40 GTA 240V TAC Control and Power 12V			
2J	60971731	1	Parallel Kit 40 GTA 240V TAC Control and Power 24V			
2K	60971733	1	Parallel Kit 40 GTA 480/277V TAC Control and Power 1			
2L	60971734	1	Parallel Kit 40 GTA 480/277V TAC Control and Power 2			

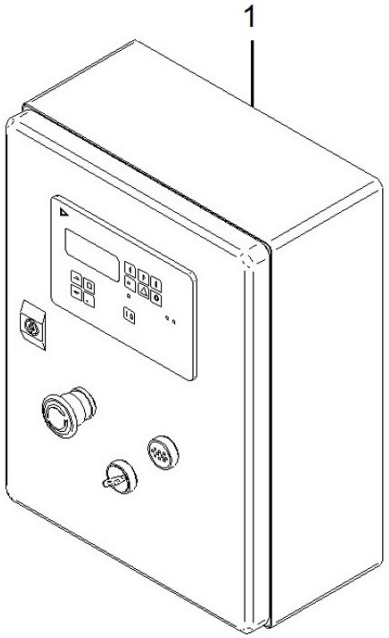

Electrical System

D_1138T			Genset Extension TAC			
Fig.	Ref.	Qty.	Descr.	Obs	From	UpTo
1A	6097A216	1	Wiring Extension Genset TAC 6 M.			
1B	6097A218	1	Wiring Extension TAC Genset 12 M. CPC 37 V.			
1C	60974552	1	3-way Wiring Wxtension for Auxiliary Kits 4 m			
1D	60900165	1	3-way Wiring Extension for Auxiliary Kits 6 m			
1F	60900166	1	3-way Wiring Extension for Auxiliary Kits 12 m			
1G	60900167	1	3-way Wiring Extension for Auxiliary Kits 24 m			
1H	60972104	1	Double Panel SCO 12 M. Harness			
1I	60972105	1	Double Panel SCO 24 M. Harness			
1J	60972110	1	Double Panel SCO 36 M. Harness			
1K	60974227.12	1	AVR External Control Cable 12m.			
1L	60974228.12	1	ECU External Control Cable 12m.			
1M	60974227.24	1	AVR External Control Cable 24m.			
1N	60974228.24	1	ECU External Control Cable 24m.			

Genset Alternator Spare Parts

D_MI74GTDN_06_1			Alternator 35 GT/GTC & 40 GTA/GTAC			
Fig.	Ref.	Qty.	Descr.	Obs	From	UpTo
1A	605113032Z0RC	1	SINCRO Alternator III 32KVA 1500RPM 400/230V Certifi			
1B	605113032Z1RC	1	SINCRO Alternator III 32KVA 1500RPM 230V Certificate			
1C	605123038Z3RC	1	SINCRO Alternator III 38,5KVA 1800RPM 240V Certifica			
1D	605123038Z2RC	1	SINCRO Alternator III 38,5KVA 1800RPM 400/230V Certi			
1E	605113032Z0RS	1	SINCRO Alternator III 32KVA 1500RPM 400/230V Certifi			
1F	605113032Z1RS	1	SINCRO Alternator III 32KVA 1500RPM 230V Certificate			
1G	605123038Z3RS	1	SINCRO Alternator III 38,5KVA 1800RPM 240V Certifica			
1H	605123038Z2RS	1	SINCRO Alternator III 38,5KVA 1800RPM 400/230V Certi			

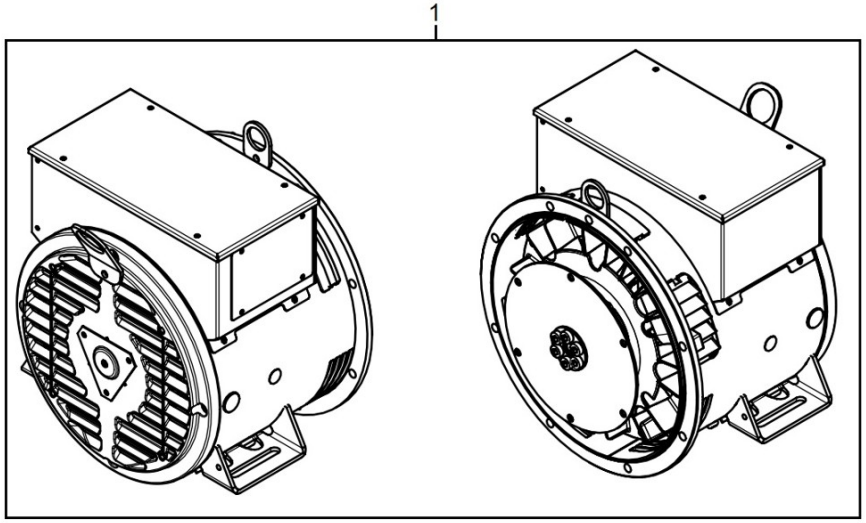

Genset Alternator Spare Parts

D_MI74GTDN_06_2			Alternator Spare Parts			
Fig.	Ref.	Qty.	Descr.	Obs	From	UpTo
1	60511336S.11	1	Fan SK160W- 4p			
2	(*)	1	Not available			
3	60511336S.09	1	Diode Bridge SK160W-			
4	(*1)	1	Not available			
5	60511336S.08	1	Bearing 6307 2RS/C3			
6	60574340S.11	1	Rear Shield			
7	60511336S.07	1	Exciter Stator SK160W-			
8	60574340S.12	1	EMC Filter			
9	605113032Z0R.1	1	Rear Grid			
10	60511336S.03	1	IP23 Grid			
11	60511336S.12	1	Kit Disks 11,5"			
12	60511336S.01	1	Top Cover			
13	60511107S.35.1	1	Electronic Board AVR BL4 U			
14	605113032Z0R.2	1	Terminal Box			
15	60511336S.02	1	M8 Insulator Clamp			
16	605113032Z0R.3	1	Exciter Rotor SK160W- 4p			
17	60511336S.04	1	M8 Terminal Board			
18	60511336S.05	1	Fuse 5x20 3,15A F			
19	60511336S.06	1	Cover on Regulator Side			

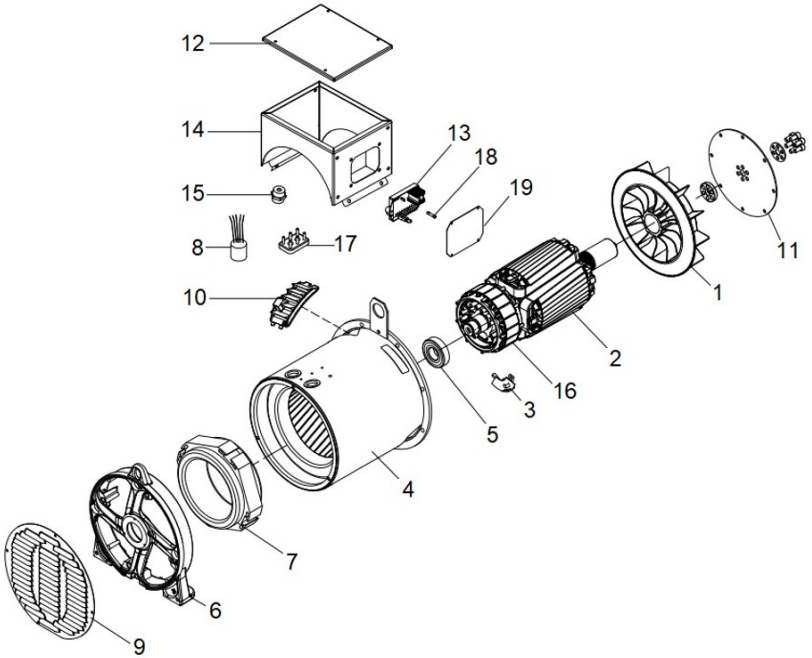

Genset Alternator Kit

D_60574068			Alternator Kit Without Cabin			
Fig.	Ref.	Qty.	Descr.	Obs	From	UpTo
1	17410001G	2	Support ANTERIUER			
2	19414022	1	Spacer 13X25X10			
3	51030012	20	Washer DIN 125-12			
4	52102308	12	Bolt DIN 933 M10-25 8.8			
5	52102358	8	Bolt DIN 933 M12-25 8.8			
6	61674002	4	Engine Mount Type F 35 SHA M12 H 41			
6	61674006	4	Engine Mount Type F BRB 110 A40 SHA M12 H 41		14/04/2023	
7	52102361	4	Bolt DIN 933 M12-40 8.8			
8	52103308	8	Bolt DIN 912 M10-25 8.8			
9	52120012	8	Nut DIN 934 M12 8.8			
10	53033010	20	Washer GROWER DIN 127-10			
11	53033012	8	Washer Grower DIN 127-12			
12	53104257	4	Bolt DIN 7984 M8-20 12.9			
13	60900311	1	Screw Connector Press Captor-2000 M32			
14	60900310	1	Connector Press CAPTOR-2000 M32 RAL7001			
15	60900306	1	Connector Press CAPTOR-2000 M25 RAL7001			
16	60900309	1	Screw Connector Press Captor-2000 M25			
NS	58088284	4	Pastic Cable Zip Tie			

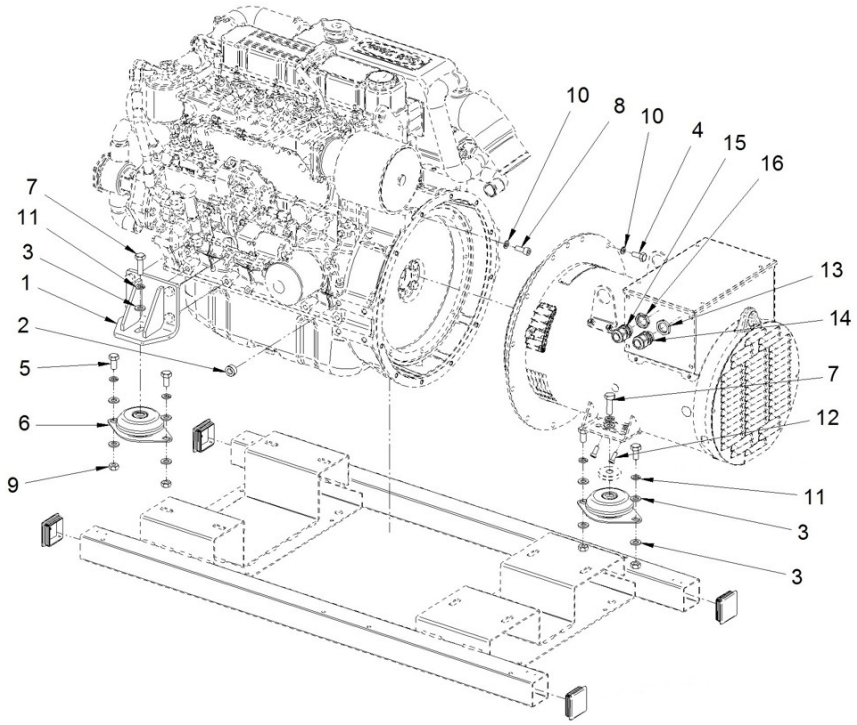

[NS] Not shown

Genset Alternator Kit

D_60574067 Alternator Kit With Cabin (400/230V & 480/277V)

Fig.	Ref.	Qty.	Descr.	Obs	From	UpTo
1	17410001G	2	Support ANTERIUER			
2	19414022	1	Spacer 13X25X10			
3	52102104	2	Bolt DIN 933 M5-10 8.8			
4	51123005	4	Nut DIN 985 M5 5.6			
5	51918054	4	Bolt DIN 7981C 3,5-9,5			
6	52102110	2	Bolt DIN 933 M5-30 8.8 CINCADO			
7	52102308	12	Bolt DIN 933 M10-25 8.8			
8	52103308	8	Bolt DIN 912 M10-25 8.8			
9	52120005	2	Nut DIN 934 M5 8.8			
10	53033010	20	Washer GROWER DIN 127-10			
11	53104257	4	Bolt DIN 7984 M8-20 12.9			
12	60573041.72	1	VOLT REGULATOR Bracket Box			
13	60574043.71	1	ALT. REGULATING Box FULL			
14	60900304	1	Coneector Press PA Grey IP68 M16			
15	60900306	1	Connector Press CAPTOR-2000 M25 RAL7001			
16	60900307	1	Screw Connector Press PA Grey IP68 M16			
17	60900309	1	Screw Connector Press Captor-2000 M25			
18	60900310	1	Connector Press CAPTOR-2000 M32 RAL7001			
19	60900311	1	Screw Connector Press Captor-2000 M32			
20	60900517	1	Cover,wiring			
21	51030005	8	Washer DIN 125-5			
NS	60900510	1	Emergency Stop PUSH BOTTOM			
NS	60900511	1	Stop PUSH BOTTOM Body			
NS	60974072A	1	Inst. Alt. To N Blue Breaker Sec. 16 - 800mm			
NS	60974072G	1	Inst. Alt. To "W" Gray Breaker Sec. 16 - 800mm			
NS	60974072M	1	Inst. Alt. To "V" Brown Breaker Sec. 16 - 800mm			
NS	60974072N	1	Inst. Alt. To "U" Black Breaker Sec. 16 - 800mm			
NS	60974076	1	Kit Fan Installation			
NS	60974088	1	4 Poles 50A Diconnector			

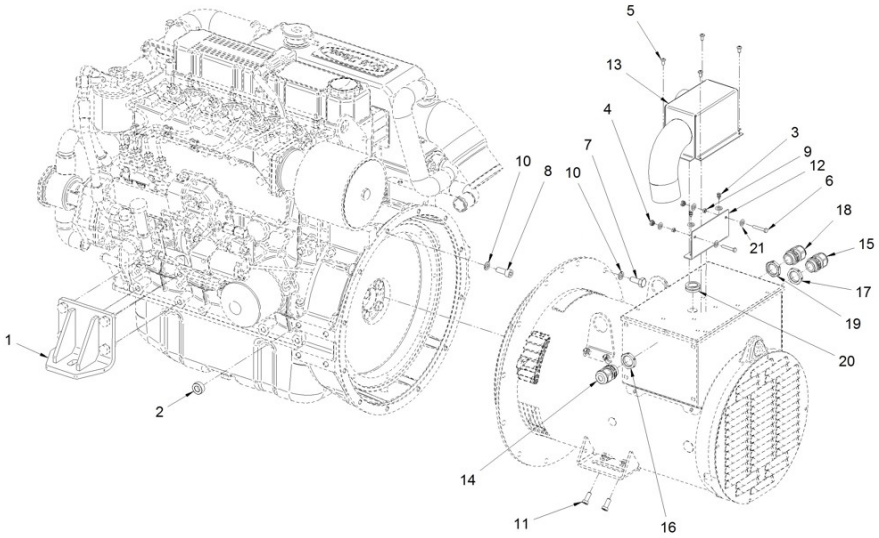

[NS] Not shown

Genset Alternator Kit

D_60574069			Alternator Kit With Cabin (230V & 240V)			
Fig.	Ref.	Qty.	Descr.	Obs	From	UpTo
1	17410001G	2	Support ANTERIUER			
2	19414022	1	Spacer 13X25X10			
3	52102104	2	Bolt DIN 933 M5-10 8.8			
4	51123005	4	Nut DIN 985 M5 5.6			
5	51918054	4	Bolt DIN 7981C 3,5-9,5			
6	52102110	2	Bolt DIN 933 M5-30 8.8 CINCADO			
7	52102308	12	Bolt DIN 933 M10-25 8.8			
8	52103308	8	Bolt DIN 912 M10-25 8.8			
9	52120005	2	Nut DIN 934 M5 8.8			
10	53033010	20	Washer GROWER DIN 127-10			
11	53104257	4	Bolt DIN 7984 M8-20 12.9			
12	60573041.72	1	VOLT REGULATOR Bracket Box			
13	60574043.71	1	ALT. REGULATING Box FULL			
14	60900304	1	Coneector Press PA Grey IP68 M16			
15	60900306	1	Connector Press CAPTOR-2000 M25 RAL7001			
16	60900307	1	Screw Connector Press PA Grey IP68 M16			
17	60900309	1	Screw Connector Press Captor-2000 M25			
18	60900310	1	Connector Press CAPTOR-2000 M32 RAL7001			
19	60900311	1	Screw Connector Press Captor-2000 M32			
20	60900517	1	Cover,wiring			
21	51030005	8	Washer DIN 125-5			
NS	60900510	1	Emergency Stop PUSH BOTTOM			
NS	60900511	1	Stop PUSH BOTTOM Body			
NS	60974073G	1	W Breaker GRAY SEC. 35 TO SYStem ALT.			
NS	60974073M	1	V Breaker BROWN SEC.35 TO SYStem ALT.			
NS	60974073N	1	U Breaker BLACK SEC. 35 TO MAGNETO			
NS	60974077	1	Kit Fan Installation			
NS	60974087	1	Switch Disconnector 80A 3 Poles			

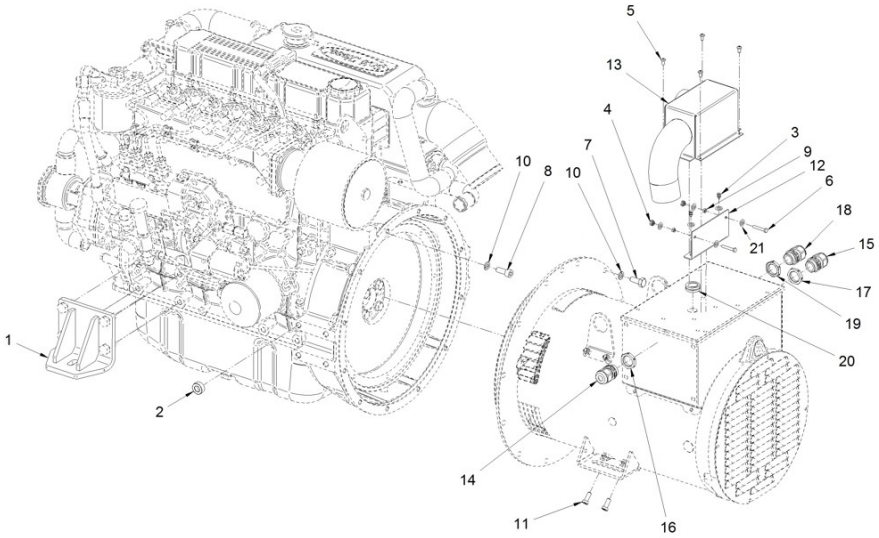

[NS] Not shown

Chassis Spare Parts

D_60574043.01			Genset Chassis			
Fig.	Ref.	Qty.	Descr.	Obs	From	UpTo
1	60574043.01	1	Genset CHASSIS			

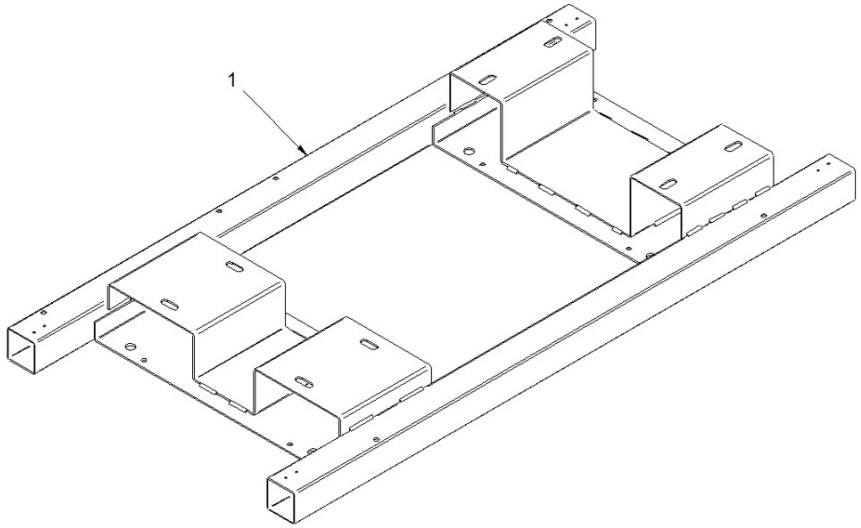

Canopy Spare Parts

D_MI74GTDN_09_1 Cabin

Fig.	Ref.	Qty.	Descr.	Obs	From	UpTo
1	51030008	16	Washer DIN 125-8			
2	51058054	22	Aluminium Rivet 4.0 X 10			
3	52103258	8	Bolt DIN 912 M8-25 8.8			
4	53038008	2	Washer DIN 6798-A 8			
5	60573041.43	4	L Fastening Bracket			
6	60574043.03	1	VERTICAL BAR			
7	60574043.04	1	VERTICAL BAR			
8	60574043.10	1	BASEBOARD			
9	60574043.20	1	Upper Panel			
10	60574043.21	1	RIGHT Side Panel MOBILE			
11	60574043.22A	1	Out Side Air Panel FIXED			
12	60574043.22B	1	Side Panel MOBILE			
13	60574043.24	1	FrontAL Panel			
14	60574043.25	1	Back Panel			
15	60574043.30	1	Upper FRAME			
16	60574043.31	1	VERTICAL BAR			
17	60574043.32	1	VERTICAL BAR			
18	60574043.61	1	Bottom Frame			
19	53033008	6	Washer GROWER DIN 127-8			
20	53105104	8	Bolt DIN 7991 M5-10 12.9			
21	52120008	8	Nut DIN 934 M8 8.8			
22	60573045.1	4	Lower Corner genset canopy			
NS	60574043.80	1	Set OF INSULATING CUT PIECES			

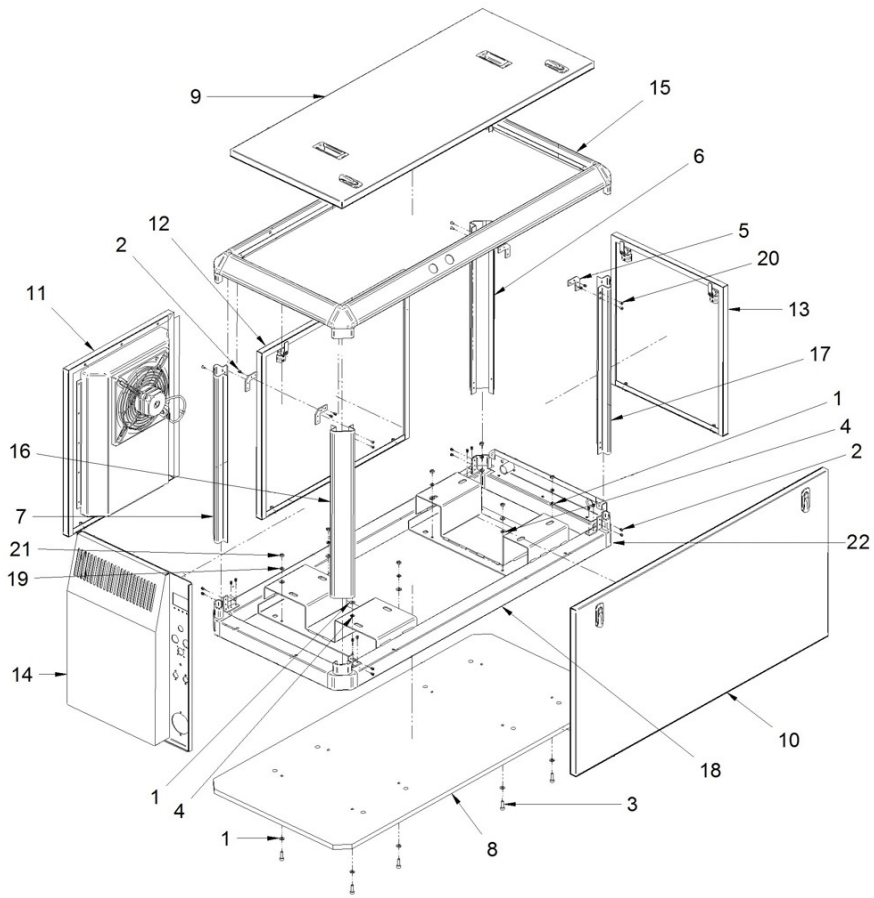

[NS] Not shown

Canopy Spare Parts

D_MI74GTDN_09_2			Cabin Kit			
Fig.	Ref.	Qty.	Descr.	Obs	From	UpTo
1	13814072	4	Straight Hose Connector 1/8" NPTF			
2	51030006	4	Washer DIN 125-6			
3	51030012	17	Washer DIN 125-12			
4	51031006	7	Washer DIN 9021 6			
5	51086015	2	One Ear Clamp With Interior Ring 13-15,3			
6	52102157	7	Bolt DIN 933 M6-20 8.8			
7	52102160	4	Bolt DIN 933 M6-35 8.8			
8	52102358	9	Bolt DIN 933 M12-25 8.8			
9	52102360	2	Bolt DIN 933 M12-35 8.8			
10	52102361	2	Bolt DIN 933 M12-40 8.8			
11	52120003	4	Nut DIN 934 M3 8.8			
12	52120004	3	Nut DIN 934 M4 8.8			
13	52120005	4	Nut DIN 934 M5 8.8			
14	52120012	8	Nut DIN 934 M12 8.8			
15	53033005	4	Washer GROWER DIN 127-5			
16	53033006	2	Washer GROWER DIN 127-6			
17	53033012	12	Washer Grower DIN 127-12			
18	54030008	3	Washer DIN 125-8 INOX.			
19	54082025	4	Clamp DIN 3017 25-40/12 W4			
20	54082050	4	Clamp DIN 3017 50-70/12 W4			
21	54083091	2	GP Clamp 85-91 W4 STC			
22	54103258	1	Bolt DIN 912 M8-25 INOX.			
23	54118004	4	Bolt DIN 7985 M3-10 INOX			
24	54118054	3	Bolt DIN 7985 M4-10 INOX			
25	54118106	4	Bolt DIN 7985 M5-16 INOX			
26	54118156	2	Bolt DIN 7985 M6-16 INOX			
27	54120006	2	Nut DIN 934 M6 INOX			
28	54120008	3	Nut DIN 934 M8			
29	57000361	2	Washer 10-14-1,5			
30	60571015	1	Sea Water Wall PASS			
31	60573041.39	2	ROD Coupling 1/8 BSP			

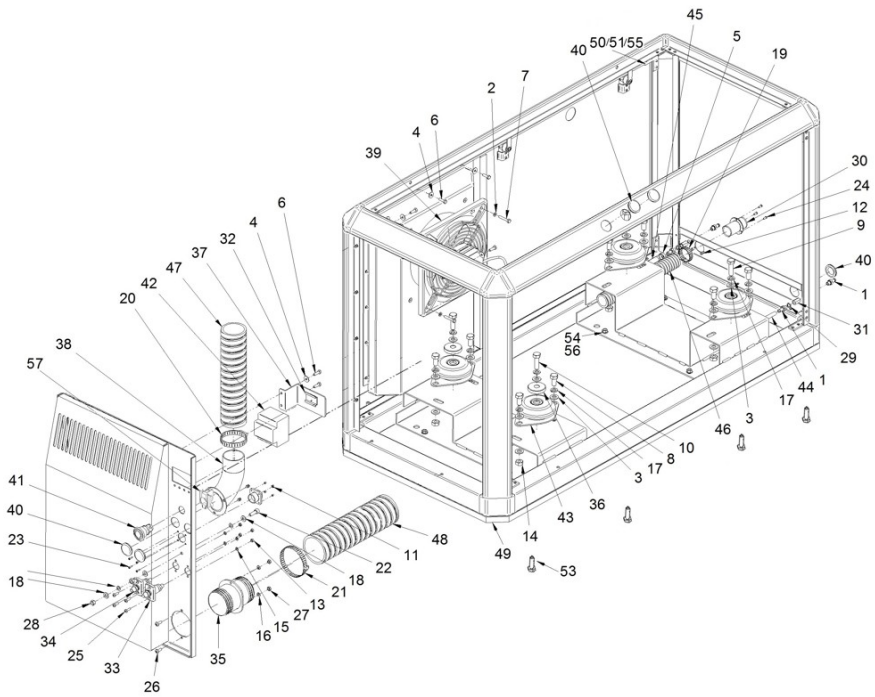

Canopy Spare Parts

D_MI74GTDN_09_2 Cabin Kit

Fig.	Ref.	Qty.	Descr.	Obs	From	UpTo
32	60573041.64	1	Switch Disconnector Omega Bracket			
33	60573047	1	Battery Plug IN			
34	60573048	1	Battery Plug IN			
35	60574024	1	Exhaust Wall PASS 75			
36	60574025	2	Washer			
37	60574043.42	1	Switch Disconnector Bracket			
38	60574043.46	1	Elbow Nozzle D60			
39	60574044.1	1	Fan HJEM 20 M4 (CASALS)			
40	60900508	5	Shutter 31			
41	60900510	1	Emergency Stop PUSH BOTTOM			
42	60974087	1	Switch Disconnector 80A 3 Poles			
43	61674002	4	Engine Mount Type F 35 SHA M12 H 41			
43	61674006	4	Engine Mount Type F BRB 110 A40 SHA M12 H 41		14/04/2023	
44	M80501006	1.0	Hose D.10-6			
45	M81510817	1.0	Fuel Hose D. 8-17			
46	M87503242	2.0	Water Intake Hose (HQ) D. 32-42			
47	M88506072	1.0	Exhaust Hose D. 60			04/03/2024
47	M88576300	1.0	Air Aspiration Hose D. 63		04/03/2024	
48	M88507587	1.0	Exhaust Hose D. 76			
49	60574043.10	1	BASEBOARD			
50	60573041.43	4	L Fastening Bracket			
51	51058054	22	Aluminium Rivet 4.0 X 10			
52	53038008	5	Washer DIN 6798-A 8			
53	52103258	8	Bolt DIN 912 M8-25 8.8			
54	53033008	7	Washer GROWER DIN 127-8			
55	53105104	8	Bolt DIN 7991 M5-10 12.9			
56	51030008	17	Washer DIN 125-8			
57	60900511	1	Stop PUSH BOTTOM Body			
NS	13817011	2	Bracket			
NS	19414030	3	STRAIGHT COUPLING 3/8			
NS	19414031	3	BOLT 3/8			

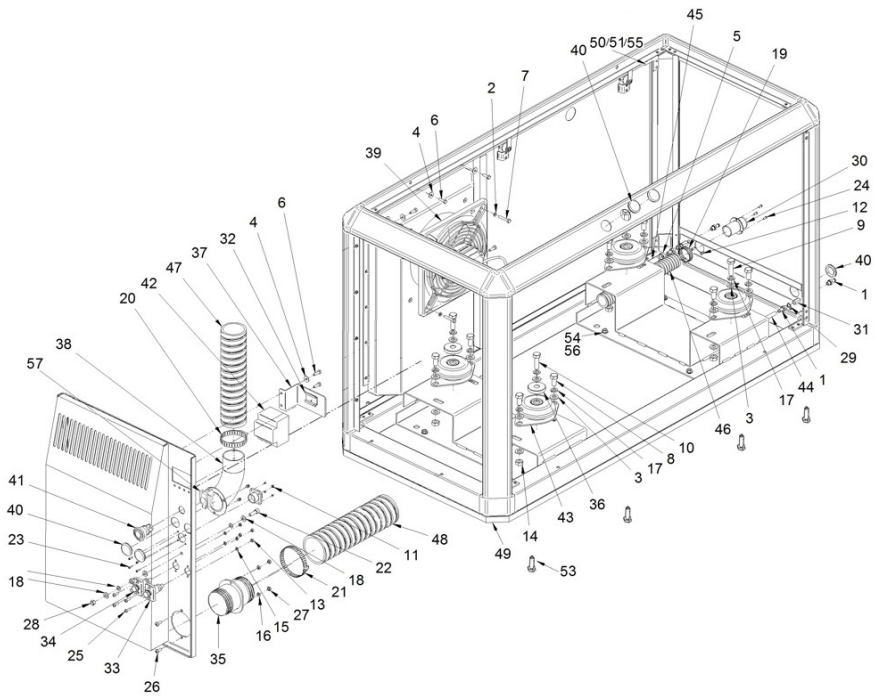

[NS] Not shown

Canopy Spare Parts

D_MI74GTDN_09_2			Cabin Kit			
Fig.	Ref.	Qty.	Descr.	Obs	From	UpTo
NS	51030005	4	Washer DIN 125-5			
NS	51030010	1	Washer DIN 125-10			
NS	52101268	1	Bolt DIN 931 M8-75 8.8			
NS	52102357	1	Bolt DIN 933 M12-20 8.8			
NS	52120006	2	Nut DIN 934 M6 8.8			
NS	52120008	8	Nut DIN 934 M8 8.8			
NS	53038010	2	Washer DIN 6798-A 10			
NS	53038012	1	Washer DIN 6798-A 12			
NS	54030006	2	Washer DIN 125-6 INOX.			
NS	54082032	2	Clamp DIN 3017 32-50/12 W4			
NS	58018160	4	Screw			
NS	58088284	4	Pastic Cable Zip Tie			
NS	59071404	1	Clamp 40/15 W1			
NS	59071452	2	Clamp 1 42/15 W1			
NS	60594041.39	1	Gasoil Wall Bushing D12 MALE			
NS	60594041.40	1	ROD Coupling 3/8 BSP			
NS	60900047	1	White Strip VDe 104 4			
NS	60972073	1	0,25 M. CHASSIS TO MOTOR Wiring GROUND			
NS	60972074	1	0,44 M. Back Panel To Alt. Wiring Ground			
NS	60972090	2	TER. PROTECTIVE 20 RED			
NS	60972091	2	TER. PROTECTIVE 20 BLACK			
NS	60972094	1	TER. PROTECTIVE 28 RED			
NS	60973049.1	1	RED Battery POSITIVE Wiring			
NS	60973053	1	Sec. 25 Black 0,95 m Ter. 10/10 cable			
NS	M88503242	2.0	DNV Water Intake Hose D. 32-42			

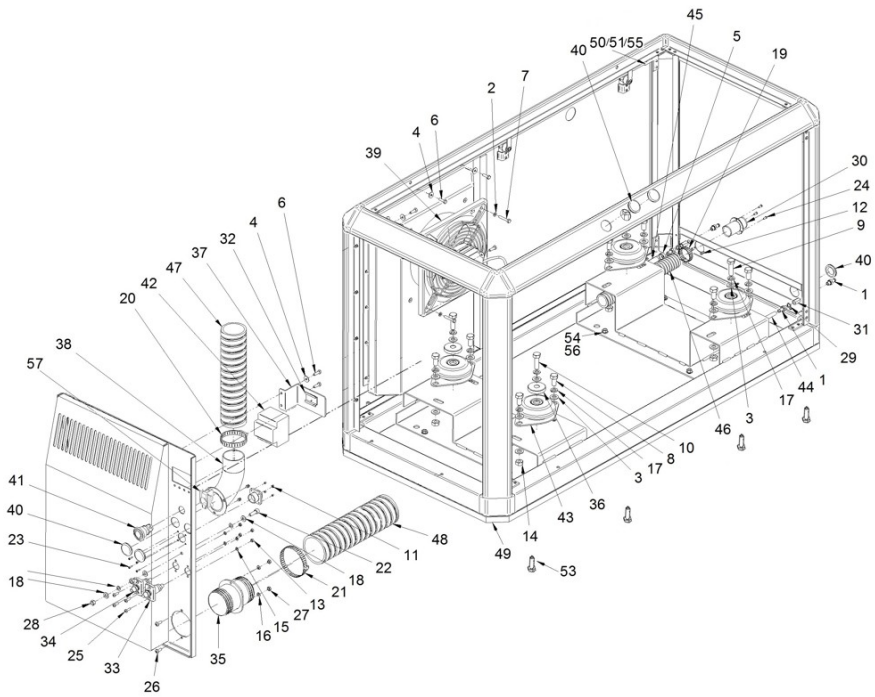

[NS] Not shown

Maintenance Kit

D_17420101DNV			Gasket Kit			
Fig.	Ref.	Qty.	Descr.	Obs	From	UpTo
0	17420101DNV	1	Gasket Kit			
1	56000073	3	Copper Washer 16-23-1,5			
2	17111021	1	Gasket			
3	13321014	1	Gasket			
4	18011008	2	O-Ring D. 72X3			
5	16513002	1	Exhaust Elbow Gasket			
6	17421035	1	Gasket,Exhaust Manifold			
7	17121013	2	Gasket			
8	17421010	1	Rocker Cover Gasket			
9	17421011	1	Gasket			
10	17421032	1	Gasket IN.MANIFOld			
11	17421042	1	Gasket			
12	17420025	1	Gasket,Rear			
13	17421004	1	Gasket,Cylinder Head			
14	17424055	1	O-Ring D. 60X2			
15	17420112	2	Seal,Valve			
16	17424063	1	Gasket			
17	56000069	2	Washer 14-20-1,5			
18	17424062.1	1	Gasket,Side Cover			
19	17424008	8	Washer,SealING			
20	17421041	1	Gasket,Side Cover			
21	17421022	1	Gasket,Pump Cover			
22	34711003	1	Gasket Cover			
23	33311013	1	O-Ring D. 15X2			
24	13310013	1	Gasket,water pump			
25	17420047	2	O-Ring D. 140X2			
26	17420040	1	Gasket,Gear			
27	17420018	1	Gasket,Front Plate			
28	17424060	1	O-Ring D. 22X2,4			
29	17425028	1	Gasket			
30	13324011	1	Washer			

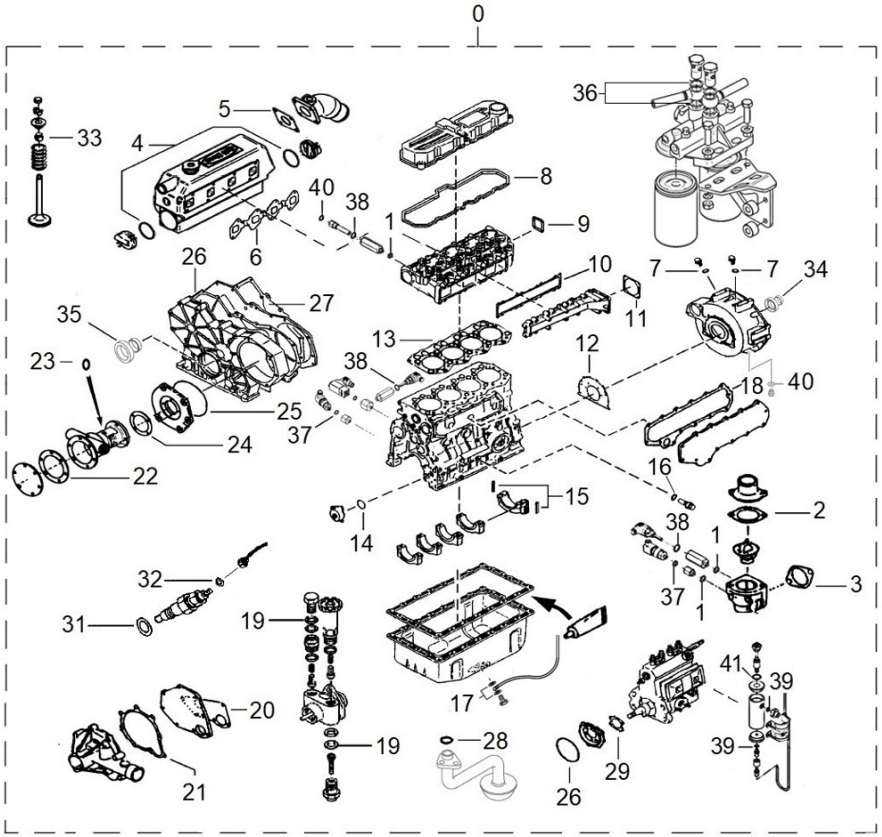

Maintenance Kit

D_17420101DNV			Gasket Kit			
Fig.	Ref.	Qty.	Descr.	Obs	From	UpTo
31	13824013	4	Injector Washer			
32	17424025G.1	4	Gasket Fuel Return (Genset)			
33	17422054	8	Seal,Valve Stem			
34	13320063	1	Seal Oil			
35	17420039.1	1	Seal Assy,Oil			
36	57000378	4	Washer 18-24-1,5			
37	56000067	3	Washer 13-20-1,5			
38	56000083	3	Washer 21-26-1,5			
39	56000061	2	Washer 10-16-1,5			
40	56000077	2	Washer 18-23-1,5			
41	56000086	1	Washer 22,3-29-1,5			

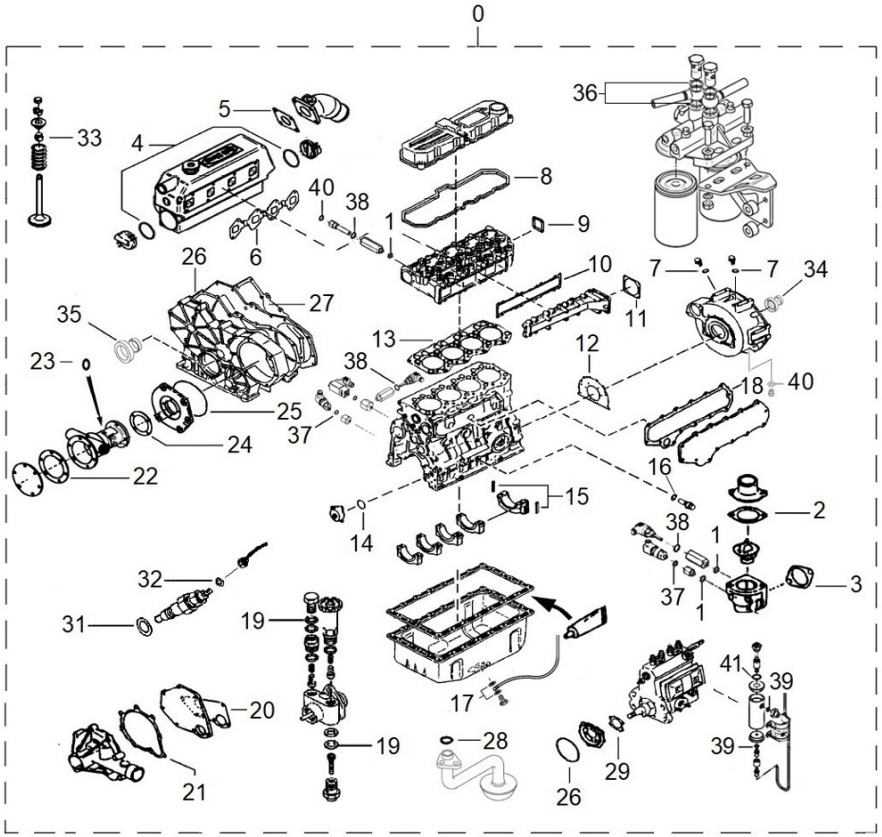

Maintenance Kit

D_17410035			Pipe Rubber Set, Water Line TAC			
Fig.	Ref.	Qty.	Descr.	Obs	From	UpTo
1	13611038	2	Pipe 30-40-75			
2	13211037	1	Pipe 30-40-85			
3	13211057	1	Rubber			
4	15211026	1	Elbow,rubber			
5	15211053	1	Pipe 38-50-100			
6	17411013	1	Thermostat Water Outlet Elbow			

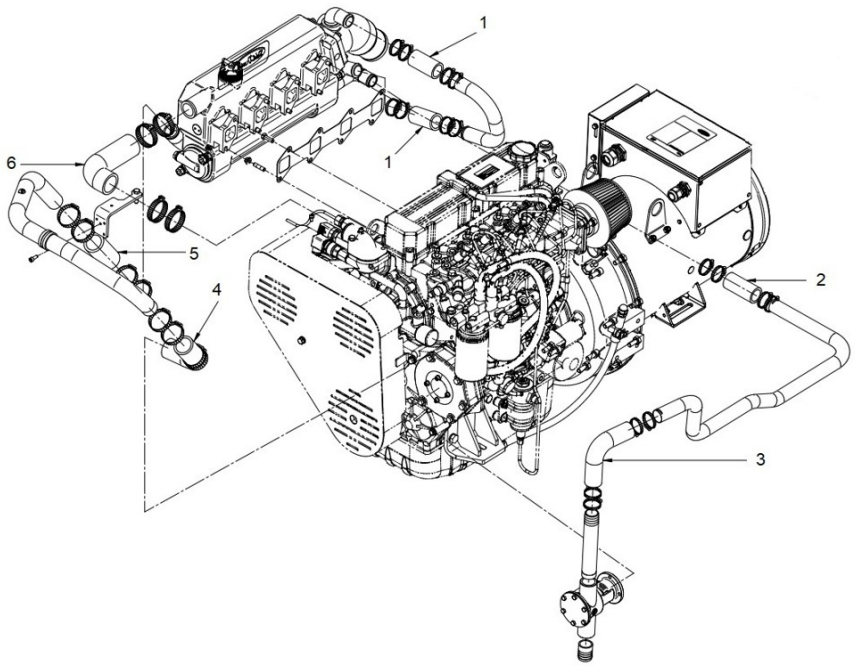

Maintenance Kit

36511000K			Repair Kit Water Pump 1"			
Fig.	Ref.	Qty.	Descr.	Obs	From	UpTo
1	34711008	1	1" Impeller			
2	34711003	1	Gasket Cover			
3	36511020	1	Seal 16-30-7			
4	36511019	1	Seal			
5	33311013	1	O-Ring D. 15X2			
6	13310013	1	Gasket,water pump			

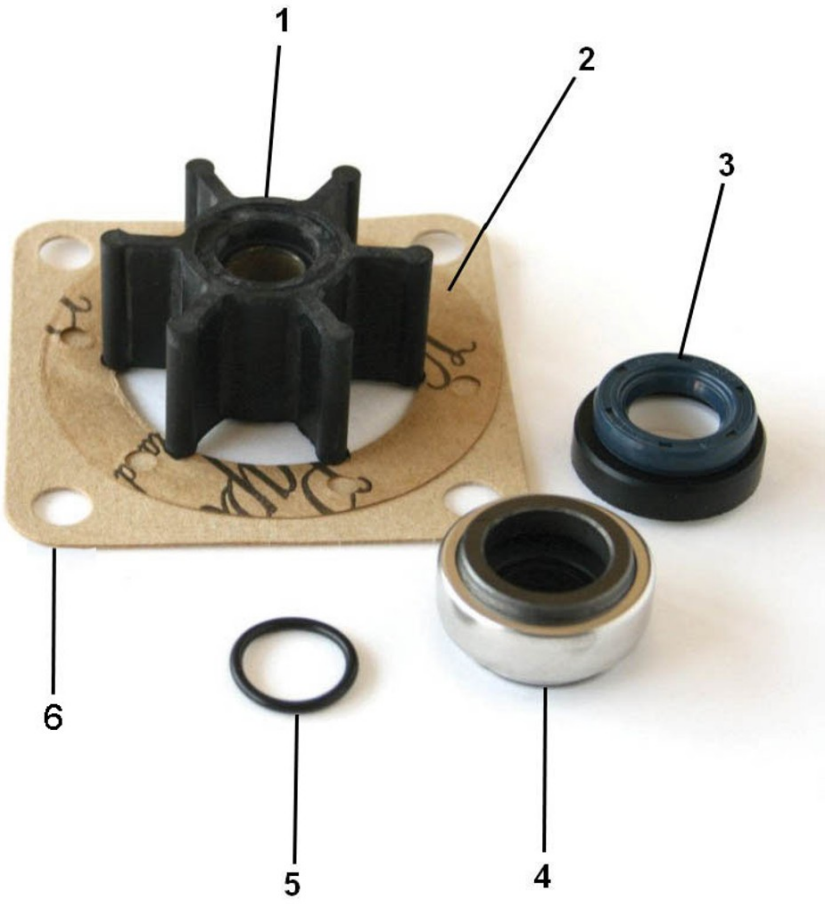

Maintenance Kit

D_UTILFA0960_1 Special Tools

Fig.	Ref.	Qty.	Descr.	Obs	From	UpTo
1	13811063	1	Refrigerator Mounting Key			
2	U3009107300	1	Idler Bushing Installer			
3	U3069100010	1	Camshaft Bushing Installer Set			
4	U3069104500	1	Valve Spring Pusher			
5	U3069113010	1	Oil seal sleeve installer set			
6	U3069121100	1	Gauge Adapter			
7	UMM74007	1	Piston Ring Pliers			
8	U32A9100100	1	Valve Guide Installer			
9	U32A9100300	1	Valve Guide Remover			
10	U32A9100400	1	Oil Pump Bushing Installer			
11	U32A9100500	1	Connecting rod bushing puller			
12	U32A9101100	1	Gauge adapter (direct injection)			

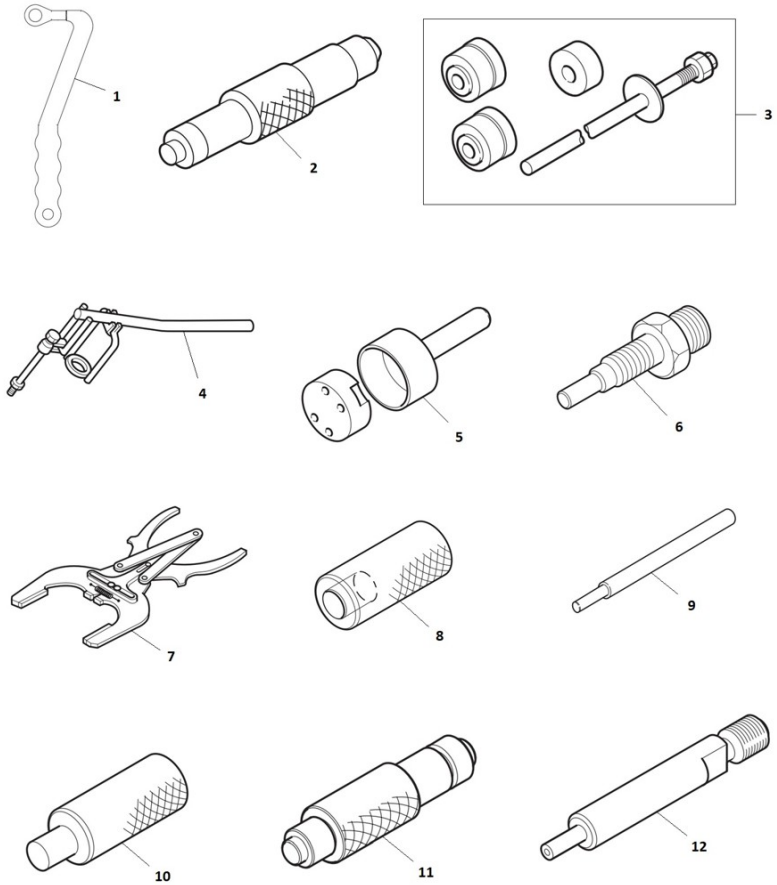

Maintenance Kit

D_UTILFA0960_2 Special Tools
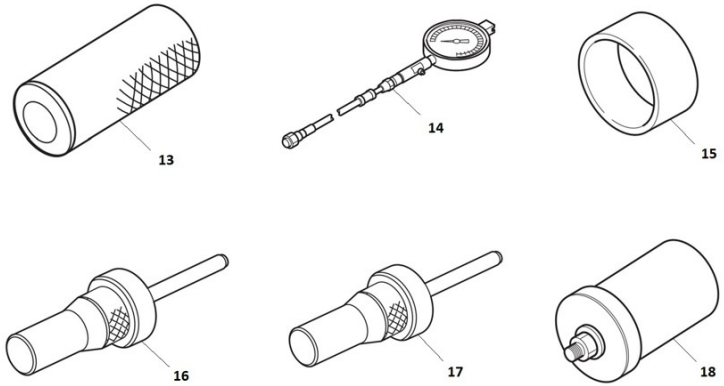
Fig.	Ref.	Qty.	Descr.	Obs	From	UpTo
13	U32A9110200	1	Stem Seal Installer			
14	19440400.2	1	Compression Manometer 10-60 Bar			
15	U3449100200	1	Piston Installer			
16	U3449103020	1	Valve Sheet Insert Caulking Tool			
17	U3679100200	1	Valve Sheet Insert Caulking Tool			
18	UMH061077	1	Idler Shaft Puller